Department of Commerce
Innovation is in our nature.

Weatherization Manual

Policies and Procedures
Specifications and Standards
Supporting Documents
Multi-Family Supplement

for
United States Department of Energy (DOE)
United States Department of Health and Human Services (HHS)
Bonneville Power Administration (BPA)
and
Matchmakers (MM)

Prepared By:
Washington State Department of Commerce
Community Services and Housing Division

April 2009 Edition

(with 2010 through 2014 revisions)

WEATHERIZATION WORKS

Department of Commerce
Innovation is in our nature.

Policies and Procedures

For Managing the Low-Income Weatherization Program

Policies - Table of Contents (TOC)

for
United States Department of Energy
United States Department of Health and Human Services
Bonneville Power Administration
and
Matchmakers

Prepared By:
Washington State Department of Commerce
Community Services and Housing Division

April 2009 Edition

(with 2010 through 2014 revisions)

WEATHERIZATION WORKS

April 2009
(Revised July 2014)

Low-Income Weatherization Program

Introduction

The Weatherization (Wx) Program increases home energy efficiency for low-income families. Thereby the Wx Program lowers energy use, reduces utility bills, and decreases the need for assistance with utility costs. The Wx Program also preserves low-income housing.

Vision:

All Washington State low-income housing is energy efficient, safe and affordable.

Mission Statement:

The Weatherization Program makes cost effective energy efficiency and related repair improvements to homes occupied by low income people to reduce energy bills and increase home health, safety and durability.

Commerce administers the Weatherization Program. Across Washington state, Local Agencies (LA) and Tribes provide weatherization services to low-income families.

Funding Sources include:

- U.S. Department of Energy (DOE) Weatherization Assistance Program
- U.S. Department of Health and Human Services (HHS) – LIHEAP
- Bonneville Power Administration (BPA)
- Washington State Matchmakers Program (MM)
- Electric and Natural Gas Utility Companies

April 2009
(Revised July 2014)

Low-Income Weatherization Program

Precedence

Weatherization (Wx) projects shall be weatherized in accordance with the State of Washington Weatherization Manual (Policies and Procedures, Specifications and Standards, Supporting Documents, and Multi-Family Supplement) for the appropriate housing type (single-family, mobile, and multi-family). On April 1, 2015, the *Guidelines for Home Energy Professionals Standard Work Specifications* and the Washington State Weatherization Field Guide, replaces the Wx Manual Specifications and Standards and the Multi-Family Supplement.

Policy defines allowable Wx Program work. The SWS defines the Wx outcomes. The field guide defines applicable work that meets the specifications, objectives, and desired outcomes outlined in the Standard Work Specifications for Home Energy Upgrades (SWS).

Where the referenced documents specify different requirements, materials, or methods of construction the most restrictive shall govern.

Policy Memos

Policy Memo revisions to this publication are posted on the Commerce Extranet Wx Site, Wx Manual page, in the Published Wx Manuals Library.

Policy memos make "Emergent Policy Changes" to the Wx Manual. Emergent Policy Changes are effective as of the date on the corresponding Policy Memo, unless another date is specified within the Policy Memo. Revisions are applied to the current Wx Manual available online at both Commerce's website and Commerce's Extranet Wx Site. Policy memos take precedence over published Wx Manual. The policy changes are automatically submitted for review during the next Proposed Change and Review Process.

Frequently Asked Questions (FAQs)

Weatherization questions and answers are posted on the Commerce Extranet Wx Site, HIP Wx Team Site page, in the Questions-Answers List. FAQs are intended to supplement, discuss, and explain Wx requirements. FAQs do not supersede requirements within either the Wx Contracts or the Wx Manual.

Web Addresses:

National Renewable Energy Laboratory's (NREL) Standard Work Specifications Tool: https://sws.nrel.gov/
Commerce Extranet Weatherization Site: https://extranet.commerce.wa.gov/

The Weatherization Manual for Managing the Low-Income Weatherization Program (Wx Manual) is prepared by the Department of Commerce (Commerce). The Wx Manual and Answers to Frequently Asked Questions (FAQs) are subject to change. Neither Commerce, nor any of their employees, makes any warranty, express or implied, or assumes any legal liability or responsibility for the accuracy, completeness, or usefulness of any information, apparatus, product, or process disclosed, or represents that its use would not infringe privately owned rights. Reference herein to any specific commercial product, process, or service by trade name, trademark, manufacturer, or otherwise does not necessarily constitute or imply its endorsement, recommendation, or favoring by Commerce or any agency thereof.

April 2009
(Revised July 2014)

Policies and Procedures

For Managing theLow-Income Weatherization Program

Table of Contents

Chapter 1 **Eligible Clients and Dwellings**

Section 1.1	Priority and Outreach to Eligible Weatherization Clients	July 2014
Section 1.1.1	Requirements for Services to Low-Income Native Americans	July 2012
Section 1.2	Determining Client Income Eligibility	July 2012
Section 1.2.1	Policies for Income Eligibility Guidelines Other than 125 Percent of Federal Poverty Guidelines	July 2012
Section 1.3	Period of Eligibility	April 2009
Section 1.4	Applicant Eligibility: Owners or Tenants	April 2009
Section 1.4.1	Use and Monitoring of Property Owner/Agency Agreements	April 2009
Section 1.5	Qualifying Multi-Unit Residences	April 2010
Section 1.6	Ineligible Residences and Exceptions	July 2013
Section 1.7	Shelters, Group Homes, and Transitional Facilities	April 2009
Section 1.8	Subsidized Housing Weatherization	April 2010
Section 1.9	Historic Preservation Review	July 2013
Section 1.10	Notification of Lead-Based Paint Hazards	July 2012

Chapter 2 **Income Eligibility Standards and Documentation** July 2012

Chapter 3 **Verification of Residence and Household**

Section 3.1	Documentation of Residence	April 2009
Section 3.2	Documentation of Household Size/Self-Declaration	April 2009
Section 3.3	Documentation of Public/Subsidized Multi-Family Buildings	April 2009

Chapter 4 **Complaints and Dispute Resolution** April 2009

Chapter 5 Providing Weatherization Services

Section 5.1	Energy Audits (SWS Section 1)	July 2014
Section 5.1.1	Windows and Doors (SWS Section 3)	July 2013
Section 5.1.2	Air Conditioning and Heating Systems (SWS Section 5)	July 2013
Section 5.1.3	Solid Fuel Burning Appliance Systems (SWS Section 2)	July 2012
Section 5.1.4	Space Heaters (SWS Section 2)	July 2012
Section 5.1.5	Water Heaters (SWS Section 2 and 7)	July 2012
Section 5.1.6	Refrigerator Replacement (SWS Section 7)	July 2014
Section 5.1.7	Fuel Switching	April 2009
Section 5.1.8	Certification of Insulation	April 2009
Section 5.1.9	Closed Wall Cavity Insulation (SWS Section 4)	July 2013
Section 5.2	Energy-Efficient Lighting (SWS Section 7)	April 2009
Section 5.3	Health and Safety Measures (SWS Section 2)	July 2012
Section 5.3.1	Testing for Excessive Carbon Monoxide (CO) (SWS Section 2)	July 2012
Section 5.3.2	Installation of CO Detectors (SWS Section 2)	July 2012
Section 5.3.3	Diagnostic Tests and Air Sealing (SWS Section 3)	July 2012
Section 5.4	Weatherization-Related Repair	July 2014
Section 5.5	Deferral Standards	April 2009
Section 5.6	Coordination with Utilities and Related Programs	April 2009
Section 5.7	Renewable Energy Systems	April 2009
Section 5.8	Deleted	July 2012
Section 5.9	Matchmakers Policy	July 2014

Chapter 6 Allowable Costs

Section 6.1	General Standards for Allowable Costs	July 2012
Section 6.2	General Standards of Fiscal Accountability	July 2012
Section 6.3	Administrative Costs	July 2012
Section 6.4	Program Operation Costs	July 2013
Section 6.4.1	Compliance with Federal Standards for Use of Recycled Insulation Materials	April 2009
Section 6.5	Training and Technical Assistance Costs	April 2010

Section 6.6	Equipment/Vehicles	July 2012
Section 6.7	Budget Revisions	April 2009
Section 6.8	Audits	April 2009

Chapter 7 **Quality Assurance**

Section 7.1	Local Agency Inspection of Weatherization Work	July 2014
Section 7.2	Commerce Program Monitoring	July 2012
Policy 7.3	Assessing Local Agency Risk	July 2014
Policy 7.4	Measuring Performance	July 2014
Policy 7.4.1	Measuring Wx Program Performance	July 2014
Policy 7.4.2	Measuring Wx Fiscal Performance	July 2014
Policy 7.4.3	Measuring Wx Technical Performance	July 2014

Chapter 8 **Program Management, Administration, and Reporting**

Section 8.1	Soliciting Providers for Weatherization Program Services	April 2009
Section 8.2	General Weatherization Work Plan	July 2014
Section 8.3	Contracts and Amendments	July 2014
Section 8.3.1	Spending Limits	April 2009
Section 8.4	Subcontracting	April 2010
Section 8.4.1	Warranties and Owner Release	July 2013
Section 8.5	Certification Regarding Lobbying	April 2009
Section 8.6	Issuance of Working Capital Advances	April 2009
Section 8.7	Reporting and Reimbursement of Expenses	July 2012
Section 8.8	Final Contract Closeout Report	April 2009
Section 8.9	Counting Year-End Unit Completions	April 2009
Section 8.10	Refunds	April 2009
Section 8.11	Program Income	April 2009
Section 8.12	Inventory Control	April 2011
Section 8.12.1	Disposition of Equipment/Vehicles	July 2012
Section 8.12.2	Weatherization Materials Transfer and Inventory	April 2009

Chapter 9 Health and Safety (SWS Section 2)

Section 9.1	Local Agency and/or Subcontractor Health and Safety	July 2014
Section 9.2	Client Health and Safety	July 2012
Section 9.3	Indoor Air Quality – Mechanical Ventilation (SWS Section 6)	July 2014
Section 9.4	Combustion Safety (old Policy 5.3.1)	July 2012
Section 9.5	Smoke, Carbon Monoxide Detectors, & Fire Extinguishers	July 2014
Section 9.6	Biologicals and Unsanitary Conditions, including Mold and Moisture	July 2012
Section 9.7	Electrical	July 2012
Section 9.8	Lead-Based Paint (old Policy 1.10)	July 2012
Section 9.9	Asbestos (old Policy 1.4)	July 2013
Section 9.10	Radon	July 2012
Section 9.11	Pests	July 2012

CHAPTER I ELIGIBLE CLIENTS AND DWELLINGS

SECTION 1.1 PRIORITY AND OUTREACH TO ELIGIBLE WEATHERIZATION CLIENTS

A. Policy

Local agencies will provide weatherization program services to eligible households in their service area and ensure that those who want to apply have an opportunity to do so. Commerce recognizes the extensive variations in the availability of eligible clients and relies on the discretion of local agencies to judge local situations.

1. **Priority**:

The following is guidance for prioritization:

a. Preference is given to households with income at or below 125 % of federal poverty guidelines.

b. Priority for weatherization services shall be provided to:

(1) High residential energy users.

(2) Households with high-energy burden.

(3) Elderly (60 years of age or older).

(4) Persons with disabilities.

(5) Children under six years of age.

(6) Native American, with particular emphasis on households residing on reservations.

2. **Outreach**:

Local agencies may use a variety of outreach methods, including:

a. Informing organizations or advocacy groups that have a special interest in, or regular contact with, persons characterized above.

b. Arranging for applications to be taken by, or at the site of, those organizations or advocacy groups.

c. Placing multi-lingual posters and materials describing the program in public areas and buildings.

d. Placing TV and radio ads to reach people who cannot read and those with limited English skills.

e. Providing interpreters for non-English speaking applicants or applicants with communications handicaps.

f. Working with energy vendors on providing customers with program information.

B. Procedure

NOTE: See above Policy for guidance. Procedure list under review/development/restructure.

SECTION 1.1.1 REQUIREMENTS FOR SERVICES TO LOW-INCOME NATIVE AMERICANS

A. Policy

1. Local agencies must serve low-income Native Americans in the local agency's service area, with particular emphasis on households residing on reservations.

2. Funds will be used annually to weatherize dwelling units of eligible low-income tribal members in proportion at least equal to the eligible non-Native American, low-income population in the local agency's area.

   a. Commerce will refer to current census data on low-income Native Americans in relationship to the general low-income population per service area when monitoring agency performance. See **Exhibit 1.1.1A, *Percent of Native American Low-Income Households***.

   b. Commerce will refer to this data when counting weatherization units reported as complete to determine whether the above requirement is being met by local agencies.

3. Local agencies must develop a Native American Outreach Plan:

   a. Local agencies shall use the Commerce template to submit their signed original Native American Outreach Plan by December 31 each year.

   b. The Commerce monitoring protocol will include the Native American Outreach Plan and service provided to Native American households.

B. Procedure

1. Local agencies may use a variety of outreach methods, such as those listed in **Section 1.1, *Priority and Outreach to Eligible Weatherization Clients***. In some areas, special outreach efforts may be required to achieve desired service levels, such as speaking at tribal community meetings.

2. See **Exhibit 1.1.1A, *Percent of Native American Low-Income Households.***

SECTION 1.2 DETERMINING CLIENT INCOME ELIGIBILITY

A. Policy

Local agencies must follow the income eligibility guidelines for the Washington State Energy Assistance Program/Low-Income Home Energy Assistance Program (LIHEAP) to determine types of eligible income, how to document income, and other eligibility rules. For length of Weatherization eligibility see **Section 1.3, *Period of Eligibility***.

1. Households must be determined income eligible prior to receiving weatherization services.

2. Commerce uses federal poverty guidelines issued by the United States Department of Health and Human Services (HHS) to establish client eligibility for the Low-Income Weatherization Assistance Program. HHS guidelines allow local agencies flexibility to consider the cost of living and higher cost of housing in some parts of the state.

   a. Highest priority will be given to households with incomes not exceeding 125 percent of federal poverty guidelines.

   b. Income received by all household members must not exceed 200 percent of federal poverty guidelines or 60 percent of state median income, whichever is greater.

   c. Local agencies must plan and document community outreach efforts to serve lowest income households, defined by 2.a., prior to serving others.

3. HHS guidelines are issued annually. Commerce provides annual updates of the federal poverty guidelines to local agencies. See ***Weatherization Income Eligibility Guidelines*** on Commerce's Weatherization page.

   The period of time used to document the household's income may be three or 12 months prior to the date of application.

   a. When three months of income are used, it will be converted to an estimated annual wage by multiplying the most recent three months of income by four.

   b. If the household is determined to be ineligible based on the average income for three months, the applicant must be notified that 12 months of documentation may be provided to redetermine eligibility.

4. All qualified aliens, regardless of when they entered the United States, continue to be eligible to receive assistance and services under the Weatherization Assistance Program if they meet other program requirements.

   When the Department of Justice (DOJ) publishes proposed rule 63 FR 41662 ("Proposed Rule on Verification of Eligibility for Public Benefits), issued in 1998, those agencies which are designated as local government agencies operating the Weatherization Program must conduct citizen "status verification". Under the DOJ ruling, local agencies subject to this ruling have two years to fully implement this procedure after the publication date of the final rule. As of this date the final rule has not yet been issued.

B. Procedure

1. Client files must include documentation of all income considered for determining eligibility.

2. See ***Weatherization Income Eligibility Guidelines*** on Commerce's Weatherization page.

3. See **Section 1.2.1, *Policies for Income Eligibility Guidelines Other than 125 Percent of Federal Poverty Guidelines***, as applicable.

4. See **Chapter 2, *Income Eligibility Standards and Documentation*.**

.

SECTION 1.2.1 POLICIES FOR INCOME ELIGIBILITY GUIDELINES OTHER THAN 125 PERCENT OF FEDERAL POVERTY GUIDELINES

A. Policy

1. Preference is given to households with income at or below 125 percent of federal poverty guidelines. Additional clients can be served at a lower priority when household income is between 125 percent federal poverty guidelines and 200 percent federal poverty guidelines or 60 percent of state median income, whichever is greater. Commerce provides income eligibility guidelines to local agencies annually.

   a. Commerce provides income eligibility guidelines, including current 200 percent federal poverty guidelines and 60 percent of state median income, to local agencies annually. See ***Weatherization Income Eligibility Guidelines***.

2. Local agencies serving households above 125 percent of poverty must:

   a. Define and document income eligibility criteria and procedures. This plan must ensure that households at 125 percent of poverty are served first.

   b. Retain a current waiting list of households whose income is at or below 125 percent of poverty.

   c. Show Commerce, when it monitors your agency, efforts made to market and identify households at or below 125 percent of poverty.

   d. Maintain a way to track clients above 125 percent of poverty guidelines.

3. Using 125 percent of poverty guidelines is always acceptable. If you exceed 125 percent of poverty guidelines, you may use 200 percent federal poverty guidelines or 60 percent of state median income as the limit, whichever is greater.

4. Income exclusions:

   a. For 125 percent poverty guidelines, all current income exclusions apply.

      These income exclusions can be found in **Chapter 2, *Income Eligibility Standards and Documentation***.

   b. For 200 percent federal poverty guidelines and 60 percent of state median income, all income exclusions apply except:

      (1) 20 percent allowance for wage earner.

(2) 10 percent retirement deduction.

(3) 10 percent deduction for unemployment benefits.

5. Eligible client income must not exceed 200 percent of federal poverty guidelines or 60 percent of state median income, whichever is greater.

B. Procedure

1. Retain a current waiting list of households whose income is at or below 125 percent of poverty.
2. Document efforts made to market and identify households at or below 125 percent of poverty.
3. Track clients served above 125 percent of poverty guidelines.
4. See ***Weatherization Income Eligibility Guidelines*** on Commerce's Weatherization page.

.

SECTION 1.3 PERIOD OF ELIGIBILITY

A. Policy

1. An applicant will remain eligible for weatherization services for 12 months from the date of verified eligibility.

2. If weatherization work is expected to begin between 12 and 15 months from the date of verified eligibility, the household must show continued eligibility.

   A signed declaration of income statement for the previous three months may be used to update application if necessary.

3. If weatherization work has not begun after 15 months from the date of application, the household must reapply in full.

   Weatherization work begins on the date of initial energy audit.

B. Procedure

Client files must include a signed declaration of income statement for the previous three months as applicable.

SECTION 1.4 APPLICANT ELIGIBILITY: OWNERS OR TENANTS

A. Policy

1. Eligible applicants must be owners or tenants of single or multi-family homes, apartments, mobile homes, shelters, or other group facilities that are qualified by Commerce and its funding agencies.

2. If the household is renting, a property owner/agency agreement must be signed by the owner or authorized agent of the building and included in the applicant household file before weatherization work begins. This includes residences designated as existing Section 8 housing. See **Section 1.4.1, *Use and Monitoring of Property Owner/Agency Agreements***, for agreement forms for single and multi-family residences.

3. Additional policies for qualifying clients and dwellings, income standards, verification and documentation are described in **Chapter 2, *Income Eligibility Standards and Documentation*** and **Chapter 3, *Verification of Residence and Household***.

B. Procedure

1. Client files must include signed copies of appropriate property owner/agency agreement forms. See **exhibits 1.4.1A, *Weatherization Program Property Owner/Agency Agreement*** and **1.4.1B, *Weatherization Program Property Owner/Agency Agreement For Multi-Family Buildings***.

2. See **Chapter 2, *Income Eligibility Standards and Documentation***.

3. See **Chapter 3, *Verification of Residence and Household*.**

Referenced in: 10 CFR 440.22(b)(1)
DOE Specific Terms & Conditions
HHS Specific Terms & Conditions
BPA Specific Terms & Conditions
MM Specific Terms & Conditions

SECTION 1.4.1 USE AND MONITORING OF PROPERTY OWNER/AGENCY AGREEMENTS

A. Policy

1. Local agencies will use the property owner/agency agreements provided by Commerce for all rental units. See exhibits **1.4.1A, *Weatherization Program Property Owner/Agency Agreement*** and **1.4.1B, *Weatherization Program Property Owner/Agency Agreement For Multi-Family Buildings***.

   a. Local agencies will not amend these agreements without Commerce's written approval.

   b. Local agencies will make every effort to contact property owners directly to discuss the Agreement, its conditions, and the benefits of weatherization to them and their rental tenants.

   c. Owner contributions are expected. Keep total investment in mind, including refrigerator replacement, when securing leveraging dollars.

2. Local agencies may implement covenant restrictions at their local discretion.

3. Local agencies must provide the following brochures before weatherization work is begun:

   a. **Exhibit 1.4.1C, *Owner-Agency Agreement & the Weatherization Assistance Program*.** Local agencies must provide a copy of this brochure to property owners to help market the agreements.

   b. **Exhibit 1.4.1D, *Tenant Rights & the Weatherization Assistance Program***. Local agencies must provide this brochure to tenants to inform them of their rights following weatherization of their dwelling units.

B. Procedure

1. Client files must include the following documentation:

   a. Signed copies of appropriate property owner/agency agreement forms.

   b. Reasons for not securing owner contributions, as applicable.

2. Provisions of the property owner and tenant brochures must be included in the local agency pre-weatherization process.

3. See exhibits **1.4.1A, *Wx Program Property Owner/Agency Agreement*** and **1.4.1B, *Wx Program Property Owner/Agency Agreement for Multi-Family Buildings***.

SECTION 1.5 QUALIFYING MULTI-UNIT RESIDENCES

A. Policy

1. Local agencies may weatherize a multi-unit building containing rental dwelling units using funds provided for eligible households when:

   a. The owner has signed a property owner/agency agreement (see **Section 1.4.1, *Use and Monitoring of Property Owner/Agency Agreements***) authorizing the weatherization work, accepting conditions protecting the interests of tenants, and other provisions required by Commerce and the local agency.

   b. Not less than 66 percent (50 percent for duplexes and four-plexes, and certain eligible types of multi-family buildings) of the resident households of the building are either of the following:

      (1) Currently eligible.

      (2) Will become eligible within 180 days.

   c. Low-income occupancy falls between 50 and 66 percent and additional funds are leveraged from property owners, utilities, or other sources.

2. DOE Fund Restrictions

   The maximum amount of DOE funds that can be used will be the lesser of either one of the following:

   a. The percentage of low-income eligible units times the total allowable weatherization costs (estimated in the initial audit).

   b. The number of eligible units multiplied by the maximum average allowable cost per unit.

3. Multi-family dwellings with less than 50 percent low-income eligibility that also have leveraged funds must obtain prior written approval from Commerce.

4. Subsidized housing within the Housing Trust Fund portfolio is given a high priority for weatherization. **Section 1.8, *Subsidized Housing Weatherization***, provides information specifically referring to these structures.

B. Procedure

1. Project files must include the following documentation:

   a. A signed copy of the appropriate property owner/agency agreement.

   b. For projects with less than 50 percent low-income eligibility and leveraged funds, a copy of Commerce approval.

2. See **Section 1.8, *Subsidized Housing Weatherization***, as applicable.

SECTION 1.6 INELIGIBLE RESIDENCES AND EXCEPTIONS

A. Policy

1. No owner-occupied residence shall be weatherized if it is being offered for sale.

2. No renter-occupied residence shall be weatherized if it is being offered for sale, unless both of the following apply:

   a. It can be demonstrated that the residence will continue to be occupied by eligible tenants.

   b. Weatherization work performed is not incorporated into the sale price.

3. No institutional buildings (university, nursing home, hospital, motel, etc.) are to be weatherized, except as noted in **Section 1.7, *Shelters, Group Homes, and Transitional Facilities***.

   If a local agency wishes to weatherize an institutional building due to unusual circumstances (excluding exceptions described in **Section 1.7**), the local agency must have prior written approval from Commerce.

4. Re-weatherization is the lowest priority. Local agencies are expected to weatherize new projects and not revisit homes previously weatherized. Justification for re-weatherization must be documented in the client files and WIDS notes.

5. Fund Restrictions and Exceptions

   a. DOE Restrictions

      (1) No funds shall be used to install or provide materials for a dwelling unit previously weatherized (re-weatherization) unless:

         (a) The dwelling unit has been damaged by fire, flood, or act of nature and repair of the damage to the weatherization materials is not paid for by insurance.

         (b) The dwelling unit was weatherized prior to September 30, 1994. Each dwelling unit weatherized prior to September 30, 1994 must receive a new energy audit, which takes into account any previous energy conservation improvements to the dwelling.

         (c) The service is to provide eligible low-cost/no-cost weatherization materials.

      (2) No funds will be used to improve the value of units designated for acquisition or clearance by a federal, state, or local program within 12 months from the date weatherization of the dwelling unit would be scheduled for completion.

b. Other Fund Sources

Taking into account any previous energy conservation improvements, regardless of when a home was weatherized or other fund sources used:

(1) BPA funds may be used to provide additional cost effective weatherization *on electrically heated homes*.

(2) LIHEAP and Matchmakers may be used to provide additional cost effective weatherization.

B. Procedure

1. Client files must include the following documentation:

   a. For renter-occupied residences offered for sale, verification of the following:

      (1) Residence will continue to be occupied by eligible tenants.

      (2) Weatherization work performed is not incorporated into the sale price.

   b. For institutional buildings, a copy of Commerce approved waiver request.

   c. For re-weatherization provided with DOE funds, verification of the following:

      (1) Repair of damage to weatherization materials by fire, flood, or act of nature is not covered by insurance.

      (2) Weatherization occurred prior to September 30, 1994.

      (3) Service provided eligible low-cost/no-cost weatherization materials.

2. See **Section 1.7, *Shelters, Group Homes, and Transitional Facilities*,** as applicable.

SECTION 1.7 SHELTERS, GROUP HOMES, AND TRANSITIONAL FACILITIES

A. Policy

1. A local agency may weatherize an emergency shelter, group home, or similar facility for long- or short-term residents, provided the owner or organization and residents of the dwelling units meet prescribed building and income eligibility requirements.

   a. Local agencies will document individual resident income verification unless there is such a high rate of turnover among residents that documentation of individual resident eligibility is impractical (see below, policy 1.b.).

   b. When documentation of individual resident income eligibility is impractical, operators of eligible facilities must complete **Exhibit 1.7A, *Weatherization Assistance Program Application for Shelters, Group Homes, and Transitional Facilities***, with the following supporting documentation:

      (1) A signed statement from the facility operator attesting that the individuals/households residing in the facility are income eligible.

      (2) A copy of the organization's income guidelines or a copy of the organization's mission statement in lieu of individual resident income verification.

2. DOE Fund Restrictions. For the purpose of determining how many dwelling units exist in a shelter, local agencies may count one of the following as a dwelling unit:

   a. Each 800 square feet

   b. Each floor

B. Procedure

1. Project files must include the following documentation, if applicable:

   a. Verification of individual resident's income eligibility.

   b. A copy of **Exhibit 1.7A, *Weatherization Assistance Program Application for Shelters, Group Homes, and Transitional Facilities*** , with the following supporting documentation:

      (1) A signed statement from the facility operator attesting that individuals/households residing in the facility are income eligible.

      (2) A copy of the organization's income guidelines or a copy of the organization's mission statement in lieu of individual resident income verification.

2. See **Exhibit 1.7A, *Weatherization Assistance Program Application for Shelters, Group Homes, and Transitional Facilities***.

3. See **Chapter 8, *Program Management, Administration, and Reporting*,** for reporting requirements.

SECTION 1.8 SUBSIDIZED HOUSING WEATHERIZATION

A. Policy

Subsidized housing shall be weatherized only if it directly benefits tenants. Direct benefits must be documented in the client file and in prior notification to Commerce. Direct benefits to the tenant include but are not limited to: economic, preserved low-income housing, added comfort, and improved indoor air quality.

1. Non-subsidized housing and nonprofit subsidized housing have equal priority for weatherization.

   This policy applies to the following types of Subsidized Housing:

   a. All conventional public housing.

   b. Federally subsidized housing:

      (1) **Housing and Urban Development (HUD)**.

      (2) **United States Department of Agriculture (USDA) Rural Development.**

      (3) **Section 8 Housing Choice Vouchers (HUD)**

2. Commerce recognizes the extensive variations in public and private subsidies that exist for rental houses and tenants, and relies on the discretion of local agencies to judge local situations.

   a. Non-subsidized housing and nonprofit subsidized housing with Housing Trust Fund investment will be given preference over public and privately owned subsidized housing for weatherization.

   b. Local agencies will apply the following guidelines for subsidized housing, in order of priority:

      (1) Non-profit housing when the organization can document its commitment to:

         (a) Retain the unit as low-income housing for at least ten years.

         (b) Perform necessary maintenance to maximize the health, safety, and energy efficiency of the unit.

         (c) Distribute consumer conservation education information on how to sustain a healthy, safe, and energy efficient home.

(2) Public housing is defined as units owned by a public housing authority where tenants pay a percentage of income for rent and utilities.

(3) Private federally subsidized housing is defined as units owned by a private developer who received financial benefits from the government to develop and/or maintain the project.

(4) Other funding options for weatherization of subsidized housing:

(a) Owners/managers of public or private subsidized homes that have access to other funding sources for weatherization such as personal resources, flexible subsidy funds, or **USDA Rural Development** must make every effort to use those funds before local agencies can consider weatherizing their units with funds from Commerce. Applicants must document the lack of funds, which will be included in the client files.

(5) Subsidized tenants receiving rental or utility subsidies under **Section 8 HUD Programs** may qualify when local agencies can be assured all of the following conditions are met:

(a) The property owner does not have access to **HUD** or **USDA Rural Development** funds. Local agencies may give preference to clients without subsidy on the waiting list.

B. Procedure

Client files must include the following documentation:

1. Direct benefit for tenants.

2. Lack of alternative funds for owners/managers of public or private subsidized homes, such as personal resources, flexible subsidy funds, or **USDA Rural Development.**

3. For subsidized tenants receiving rental or utility subsidies under **Section 8 HUD Programs,** no access for the property owner to **HUD** or **USDA Rural Development** funds.

SECTION 1.9 HISTORIC PRESERVATION REVIEW

A. Policy

1. Local agencies that undertake weatherization work with funding from Commerce must ensure that properties listed on or eligible for the National Register of Historic Places abide by the Secretary of the Interior's **Standards for Historic Preservation as required by law under 36 CFR 800** and the **National Historic Preservation Act (NHPA) of 1966**.

   Washington State's **Department of Archaeology and Historical Preservation (DAHP)** provides guidance for these standards.

2. The application for Federal funds necessitates an environmental review for Historic and Cultural Resources. This applies to all weatherization programs, including DOE, HHS, BPA, and the MM Program.

3. Failure to comply with this law will result in disallowed costs.

B. Procedure

1. Client files must include a copy of **Exhibit 1.9A, *Historic Preservation Checklist*** and the following documents, if applicable.

   a. **DAHP *EZ-1*, Project Review Sheet** for Historic and Cultural Resources Review, including DAHP's response.

   b. **DAHP *EZ-2* Determination of Eligibility** on-line Historic Property Inventory process, including DAHP's response.

   c. **DAHP *EZ-3* Building Rehabilitation Worksheet** for buildings listed or eligible to the National Register of Historic Places, including DAHP's response.

2. See **National Park Service (NPS) *Preservation Brief 3, Conserving Energy in Historic Buildings***. The brief contains information on energy conservation for historic buildings, with specific recommendations for positive results in the weatherization of structures. Please share this material with staff, crew, and subcontractors. *To access the brief, open the above link.*

3. See **NPS Preservation *Brief 9, The Repair of Historic Wooden Windows*.** The brief contains information on weatherization and window replacement. Please share this material with staff, crew, and subcontractors. *To access the brief, open the above link.*

4. See **Secretary of the Interior's *Standards for Rehabilitation*.** These are the guidelines DAHP will follow for window treatments. Please share this material with staff, crew, and subcontractors. *To access the standards, open the above link.*

SECTION 1.10 NOTIFICATION OF LEAD-BASED PAINT HAZARDS

A. Policy

See **Section 9.8, *Lead-Based Paint***

CHAPTER 2 INCOME ELIGIBILITY STANDARDS AND DOCUMENTATION

A. Policy

1. The Weatherization Program follows the Washington State Energy Assistance Program/Low-Income Home Energy Assistance Program (LIHEAP) income eligibility guidelines. These guidelines allow the Weatherization Program to recognize differences in the cost of living and higher cost of housing in some parts of the state. See **LIHEAP Policy 1.3.0, *Determining Income Eligibility*** and **LIHEAP Policy 1.3.1, *Defining Types of Income, Exclusions and Deductions***.

2. When considering earned income, all pay periods must be accounted for in the period used to establish eligibility.

3. Average income reported by current members of the household will be considered. See **LIHEAP 1.3.0 (B), *Average Gross Income Will Be Calculated***.

4. DSHS and SSA income documentation received by an applicant for the month prior to application will be considered the average monthly income from the income source - unless the client indicates the income varied in amount over the period considered.

5. Client file must contain income eligibility documentation.

   a. Types of documentation allowed:

      (1) Clear copies of income documents.

      (2) Signed and dated statement by local agencies that the document was seen. See **Exhibit 2A, *Income and Residence Verification Checklist***. Local agencies may use this exhibit or equivalent documentation to record the "I saw" verification of client status, income, and residence.

      (3) Self-declaration.

         (a) Signed declaration of income statement must be used when documentation is unavailable.

         (b) Clients claiming zero income must sign a declaration of no income. See **LIHEAP Exhibit 504D, *Declaration of No Income***. Local agencies may use this exhibit or equivalent documentation.

   b. For households applying to both the Energy Assistance and Weatherization programs, local agencies must follow applicant file and verification procedures defined by the Washington State Energy Assistance Program/LIHEAP. See **LIHEAP Policies 1.1.0, *Compiling An Applicant File***; and **1.3.4, *Documenting Public Assistance***

Income. See **LIHEAP Exhibit 501, *Household Information Form (HIF)***. Local agencies may use this exhibit or equivalent documentation.

c. For households applying only for Weatherization, local agencies must collect the information included in **Exhibit 2B, *Household Member & Income Information Form***. Local agencies may use this exhibit, the **LIHEAP Exhibit 501, *Household Information Form (HIF)*** or equivalent documentation.

6. Local agencies will maintain the privacy of client personal information.

   a. Personal information collected, used, or acquired in connection with the Weatherization Program shall be used solely for the purpose of providing weatherization services. Local agencies agree not to release, reveal, publish, transfer, sell, or otherwise make known to unauthorized persons a client's personal information without his or her express written consent or as provided by law. Written consent must include what client information may be shared and to whom or which agencies/businesses.

   b. Local agencies agree to implement physical, electronic, and managerial safeguards to prevent unauthorized access to personal information. Personal information includes information that would identify an individual's health, education, business, use or receipt of governmental services, name, address, age, telephone number, social security number, driver's license number, and finances including financial profiles, credit card numbers, or other identifying numbers.

   c. Commerce reserves the right to monitor, audit, and investigate the use of personal information collected, used, or acquired by local agencies. Not properly maintaining clients' private information could result in termination of a contract or subcontract.

   d. Local agencies agree to indemnify and hold harmless Commerce, the State and its officers, employees, and authorized agents for any damages related to local agencies' unauthorized use of personal information.

   e. Local agencies shall include this client privacy policy in all subcontracts. In addition, local agencies shall include in subcontracts a clause stating that subcontractors agree to indemnify and hold harmless local agencies, the State and its officers, employees and authorized agents for any damages related to subcontractors' unauthorized use of personal information. Local agencies are responsible for monitoring the use of personal information collected by subcontractors.

7. Local agencies must acquire signed client waivers enabling Weatherization Program access to utility and other energy vendor billing records and that account information, including account number, the name to which the account is billed and the billing address is accurately recorded for all clients. Account information must be gathered for all energy vendors, both electric and the primary heating source, and must include both

consumption and expenditure data. See **Exhibit 2C, *Sample Weatherization Program Utility Information Release Waiver***.

B. Procedure

2. Client files must include the following income eligibility documentation as applicable:

   a. **LIHEAP Exhibit 501, *Household Information Form (HIF)***, or equivalent documentation.

   b. **Exhibit 2A, *Income and Residence Verification Checklist***, or equivalent documentation.

   c. **Exhibit 2B, *Household Member and Income Information Form***, or equivalent documentation.

   d. For clients submitting a signed declaration of income statement, documentation must include both of the following:

      (1) Signed declaration of income statement for the three (3) or 12 months prior to date of application.

      (2) A note indicating efforts made to obtain documentation and the reason it could not be obtained.

   e. **LIHEAP Exhibit 504D, *Declaration of No Income***, or equivalent documentation.

   f. Additional LIHEAP Energy Assistance Program documentation when applicable.

3. Client files must include the following additional documentation:

   a. Records showing work completed and cost of measure with total for all measures.

   b. Appropriate property owner/agency agreement form. See **Exhibit 1.4.1A, *Weatherization Program Property Owner/Agency Agreement*** or **Exhibit 1.4.1B, *Weatherization Program Property Owner/Agency Agreement for Multi-Family Buildings.***

   c. Commerce approved home energy audit form. A print out of the Targeted Residential Energy Analysis Tools (TREAT) audit is acceptable.

   d. Privacy policy signed by the local agency and client.

   e. **Exhibit 2C, *Sample Weatherization Program Utility Information Release Waiver***, or equivalent documentation.

4. See **LIHEAP Policy 1.3.1, *Defining Types of Income, Exclusions and Deductions***.

5. See **LIHEAP Policy 1.1.0, *Compiling An Applicant File***.

6. See **LIHEAP Policy 1.3.0, *Determining Income Eligibility*** and **LIHEAP 1.3.0 (B), *Average Gross Income Will Be Calculated***.

7. See **LIHEAP Policy 1.3.0 (H), *Verifying Sources of Income*.**

8. See **LIHEAP Policy 1.3.4, *Documenting Public Assistance Income***.

CHAPTER 3 VERIFICATION OF RESIDENCE AND HOUSEHOLD

SECTION 3.1 DOCUMENTATION OF RESIDENCE

A. Policy

The Weatherization Program follows Washington State's Energy Assistance Program/Low-Income Home Energy Assistance Program (LIHEAP) guidelines for verification of residence and household. See **LIHEAP Exhibit 501, *Household Information Form (HIF)*** and **LIHEAP Policy 101(A), *Residence Documentation***.

Applicant must show evidence that the reported address is correct.

B. Procedure

1. Client file must include a copy of **Exhibit 2A, *Income and Residence Verification Checklist***, or an equivalent form that collects required residence documentation.

2. Client residence is verified based on seeing any of the following documents:

   a. Deed/title

   b. Lease/rental agreement or statement from landlord

   c. Subsidized housing lease

   d. Tax statement

   e. Other, such as the following:

      (1) Driver's license

      (2) Fuel or other utility bill in the applicant's name

      (3) Mortgage payment receipt

      (4) Home repair bill

      (5) Room and board receipts

      (6) Letters addressed to the applicant with canceled postage

      (7) Bank statement

SECTION 3.2 DOCUMENTATION OF HOUSEHOLD SIZE/SELF-DECLARATION

A. **Policy**

The applicant's self-declaration will be sufficient to verify household size.

B. **Procedure**

Client files must include one of the following sources of documentation:

1. **LIHEAP Exhibit 501, *Household Information Form (HIF)***,
2. A written and signed declaration of household size.

SECTION 3.3 DOCUMENTATION OF PUBLIC/SUBSIDIZED MULTI-FAMILY BUILDINGS

A. **Policy**

Local agencies may use their own certification form to verify income eligibility of residents in public/subsidized multi-family buildings. When centralized records are available, they may substitute for individual Household Information Forms.

B. **Procedure**

Project files must include verification of resident income eligibility.

CHAPTER 4 COMPLAINTS AND DISPUTE RESOLUTION

A. Policy

1. Local agencies have the responsibility to resolve all client complaints, including applicant denials, project deferrals, and work quality issues.

2. Local agencies shall establish a clear, objective, and prompt dispute resolution process. It must include mediation and arbitration should internal procedures fail to remedy a complaint. See **Exhibit 4A, *Sample Dispute Resolution Flow Chart***. This model is an example of a process that meets Commerce's requirements. The model can be modified to meet an agency's structure and approach. Remember to carefully consider on a case-by-case basis client grievances that cannot be easily or quickly resolved.

   a. A grievance must be filed in writing for a local agency to take action, except when a client complaint can be resolved quickly. See **Exhibit 4B, *Client Complaint Form*** and **Exhibit 4C, *Service Review Request***. These documents are examples of a process that meets Commerce's requirements.

   b. Local agencies' process must include the following client rights:

      (1) Have a representative speak on behalf of the client – including an interpreter if needed.

      (2) Review and obtain copies of the client's file.

      (3) Present oral and written statements.

      (4) Call witnesses and to question or cross-examine witnesses.

   c. The client will be informed of a decision to the resolution process within 10 working days of complaint receipt.

3. Local agencies will inform all clients at time of application of their right to file a grievance. Local agencies will also be responsive to requests for information regarding the dispute resolution process.

4. Clients may withdraw a grievance at any time with the understanding that they may re-enter the process at the point they withdrew if a complaint is not resolved.

5. Local agencies must:

   a. Document each step of a grievance proceeding, including communication with the client.

   b. Inform Commerce if a grievance is slated for mediation or arbitration.

   c. Inform Commerce of final resolution due to mediation or arbitration.

d. Make all compliant and grievance documentation, including all resolutions, formal and informal, available to Commerce for review upon request.

6. Commerce role and responsibilities:

   a. Approve local agency's dispute resolution process.

   b. Monitor local agency's use of approved process.

   c. Be available for technical assistance and consultation.

   d. Redirect local agency to approved dispute resolution process if necessary.

   e. Subject to need, assist the Building Performance Center (BPC), as the State's designated Peer Circuit Rider, in assigning a local agency representative with appropriate technical expertise to aid local agencies with outside review.

   f. Review complaints that Commerce receives and determine if client has gone through all steps of approved dispute resolution process. In not, refer client back to local agency to complete approved process.

B. Procedure

1. Local agencies must submit their complaint resolution process for Commerce approval within 90 days of policy adoption and as part of the annual General Weatherization and Repair Work Plans.

   Commerce recommends coordinating with the local dispute resolution center and professional arbitration services when crafting a dispute resolution process. See exhibits **4D, *Dispute Resolution Fact Sheet*** and **4E, *Dispute Resolution Resources***.

2. See **Exhibit 4A, *Sample Dispute Resolution Flow Chart*.**

3. See **Exhibit 4B, *Client Complaint Form***.

4. See **Exhibit 4C, *Service Review Request***.

5. See **Section 8.2, *General Weatherization Work Plan***.

CHAPTER 5 PROVIDING WEATHERIZATION SERVICES

Commerce provides weatherization services based upon the house-as-a-system approach integrating advanced weatherization technologies into service delivery. This approach includes data collection, testing, assessments, and education for all eligible clients. Services include an energy audit, a complete visual assessment, assessment of electric base load measures (water heaters, refrigerators, compact fluorescent light bulbs, lighting fixtures, and space heaters), diagnostic tests, energy-related health and safety assessment, consumer conservation education, appropriate low-cost measures, applicable weatherization-related repairs, and a thorough consideration of the client and residence.

SECTION 5.1 ENERGY AUDITS

A. Policy

1. All single family and multi-family dwellings must receive a comprehensive, on-site, energy audit prior to receiving weatherization services**.**

   a. A trained and qualified auditor, someone other than the inspector, shall conduct energy audits and develop the Scope of Work (SOW).

      Exception: Local Agencies that are unable to meet this requirement shall self-identify in writing to Commerce, by July 1, 2014. Commerce and the Wx Network will work together to develop an acceptable alternative(s).

      (1) Must be certified as a building analyst by the Building Performance Institute (BPI).

      (2) Training and testing will be provided by the Peer Circuit Rider/Building Performance Center.

      (3) Newly hired auditors must have work reviewed including on-site review by a certified Building Analyst 1 (BA1) until such time that they become certified.

   b. TREAT (Targeted Residential Energy Analysis Tools) has been adopted as the authorized energy audit tool to be used in the weatherization program. It is required for analysis of any type of measure, or dwelling unit, not specifically covered by a DOE approved priority list for the Washington State Low-Income Weatherization Program.

(1) Commerce requires local agencies to calculate and maintain current costs for materials, labor (including any applicable prevailing wage rates), and fuels to be used in the TREAT auditing process.

(2) Local agencies are responsible for ensuring that all staff performing computerized energy audits acquire and maintain proficiency using TREAT.

2. TREAT will be used to develop a scope of work. The most cost-effective measures as determined by TREAT will be installed in descending order of cost effectiveness subject to funding availability.

   Exception: A Priority List of Weatherization Measures has been adopted for use on site built dwellings (single family and small multi-family (four units or less)), mobile home dwellings, and multi-family dwellings (electrically heated, five units or more, and three stories or less in height). Major Measures will be installed in order as shown on the approved priority list. Major Measures will include related work such as; cutting accesses into ceilings or side attics, knob & tube inspections, minor electrical repairs, or other minor repairs needed to complete weatherization measures. See ***WPN 12-9 Weatherization Assistance Program Incidental Repair Measure Guidance*** for definition of "Ancillary Items"and more examples. The Priority List of Weatherization Measures for Multi-Family (five units or more) will be the same as for Site-Built (up to 4 units). See **Exhibit 5.1A, *Priority List of Weatherization Measures***.

   a. Local Agencies must choose one energy audit tool for each Wx project; either "TREAT" or the "Priority List of Weatherization Measures." Do not use both on a single Wx project.

   b. Measures not included in the Priority List of Weatherization Measures, or specifically permitted by policy, will require use of TREAT to justify a Wx project and the investment by the weatherization program. Failure to use TREAT to justify a Wx project that includes measures not included in the Priority List of Weatherization Measures, or by other policy, will result in disallowed costs.

   c. When using TREAT, individual weatherization measures and the total package (with the exception of health and safety measures) must have an SIR of 1.0 or greater. The cost of Weatherization Related-Repairs (incidental repairs) must be included in the cost of the package of measures installed in a dwelling.

      Leveraged funds may be used to reduce weatherization fund source investments in order to bring the SIR to 1.0 or greater.

3. Local agencies will review the energy audit and a weatherization-specific scope of work with all clients receiving weatherization services.

4. Local agencies will obtain client and property owner signatures authorizing the installation of weatherization measures prior to work commencing.

   Exception: Multi-family dwellings with five or more units require property owner signatures and owner commitment to tenant notification.

   References:

   a. **Exhibit 1.4.1A, *Wx Program Property Owner/Agency Agreement***

   b. **Exhibit 1.4.1B, *Wx Program Property Owner/Agency Agreement for Multi-Family Buildings***

   c. **Exhibit 1.4.1C, *Owner/Agency Agreement Brochure***

   d. **Exhibit 1.4.1D, *Tenant Rights and the Weatherization Assistance Program Brochure***.

Allowable Costs

Home energy audits are an allowable cost under DOE, HHS, BPA, and MM funds. See **Chapter 6, *Allowable Costs***, for allowable expenditures.

Specific fund source limitations or allowances are as follows:

BPA: Units must be electrically heated in BPA service territory.

B. Procedure

1. Programmatic

   a. Client files must include the following documentation:

      (1) List of repairs needed to protect weatherization materials or their function.

      (2) List of health and safety hazards identified prior to the installation of weatherization materials.

(3) An **Exhibit 5.S3A, *Diagnostic Test Report*** shall be filled out and be present in the client file. For multi-family dwellings type 2-5 refer to the ***Multi-Family Supplement Draft Guidance for Managing the Low-Income Weatherization Program*.**

(4) An **Exhibit 5.3.1A, *Combustion Safety Form*** shall be filled out for each combustion appliance and be present in the client file.

(5) Energy audit assessment information including but not limited to: square footage of the dwelling, type of dwelling, existing levels of insulation, type and condition of space heating system and water heating system, and other necessary information to support any measures installed using an approved priority list or TREAT.

(6) Ownership status, owner/agency agreement, and owner cash contribution.

(7) Historic preservation status.

(8) Previous weatherization, including date(s) work performed and installed weatherization measures.

(9) A comprehensive and weatherization-specific scope of work.

(10) Other applicable information as collected by the local agency, for example: pre-weatherization billing data, energy intensity, and client lifestyle assessment. NOTE: If a TREAT audit is utilized all documentation supporting agency inputs is required in the project file. For multi-family (five units or more), import or enter the most recent energy bill data (minimum 12 months) to calibrate (true up) the TREAT model.

(11) Signed client and property owner authorization, as applicable.

(12) Verification installed measures have an SIR of 1.0 or greater as determined by TREAT or the Priority List of Weatherization Measures.

(13) Delivery of consumer conservation education, individual or classroom.

Exception: For multi-family projects, at a minimum the Consumer Conservation Education requirement may be met by door hanger or packets on each unit.

(14) All necessary measure-specific justification.

b. Results of all electronic audits must be retained in the local agency's central electronic file.

c. See **Exhibit 5.1A, *Priority List of Weatherization Measures***.

d. See **Chapter 6, *Allowable Costs***.

e. See **Chapter 9, *Health & Safety***.

2. Required Installation Standards and Materials Specifications

   See ***Specifications for the Low-Income Weatherization Program*** on Commerce's Weatherization Documents Web page.

3. Best Practices

   See ***EOW Field Guide***

SECTION 5.1.1 WINDOWS AND DOORS

A. Policy

1. Local agencies may repair or replace exterior windows and doors when the cost can be justified for any of the following reasons:

   a. Energy efficiency if the investment of Commerce administered weatherization funds (DOE, HHS, BPA, and MM) is justified using an evaluation of cost-effectiveness where the Savings to Investment Ratio (SIR) is 1.0 or greater. For DOE funding, this is the only allowable option window or door repair or replacement. (See Allowable Costs below)

   b. Health and safety

      If the cost to replace windows and doors is less than the cost to repair, then they shall be replaced.

   c. Security

      If the cost to replace windows and doors is less than the cost to repair or replace components that will reasonably ensure security, then they shall be replaced.

   d. Durability

      If the cost to replace windows and doors is less than the cost to repair, then they shall be replaced.

   e. Leveraged funds (sources other than DOE, HHS, BPA, and MM) are available that will cover at least 75 percent of the cost of the windows and doors and their installation.

      Examples of leveraged funds are property owner contributions, approved utility contributions, or HRRP funded measures.

   f. Client comfort (window replacement only)

      Specific windows that effect client comfort may be replaced.

   g. Jalousie windows in mobile or site-built homes may be replaced to bring air leakage down to the air sealing target after all other blower-door directed air sealing has been done. Do not automatically replace windows in bedrooms where the leakage around the window may be needed to provide proper ventilation.

Local agencies may split the cost for jalousie window replacement between air leakage reduction and an increase in thermal efficiency when running the calculations through TREAT.

2. Local agencies shall make an attempt to secure owner contributions if window and door repair and replacement are for rental units.

Allowable Costs

Window and Door repair and replacement are allowable costs under DOE, HHS, BPA, and MM funds.

Unless health and safety related, repair and replacement must be included in the SIR calculation for all fund sources and in the DOE per home expenditure average (building cost calculation). See **Chapter 6, *Allowable Costs*** and **Exhibit 6, *Fund Matrix*** for allowable expenditures.

Specific fund source limitations or allowances are as follows:

DOE: Window or Door replacement, repair, or installation is not an allowable health and safety cost but may be allowed as an incidental repair or an efficiency measure if justified using an evaluation of cost-effectiveness where the Savings to Investment Ratio (SIR) is 1.0 or greater.

BPA: Units must be electrically heated in BPA service territory.

B. Procedure

1. Programmatic

a. Client files must include or be supported by the following documentation:

(1) Verification installed measure has an SIR of 1.0 or greater if repair or replacement is based on energy efficiency.

(2) Electronic or printed photos of existing windows and doors and written justification if repair or replacement is for health and safety, security, and/or durability.

(3) Proof of leveraging of at least 75 percent of material and labor costs from other funds, when leveraged funds are the reason for window replacement.

(4) A statement from the client if window is replaced for client comfort.

(5) If a jalousie window replacement, blower door test results documenting the effect of replacement after air sealing.

(6) All necessary measure-specific justification.

b. See **Chapter 6, *Allowable Costs***.

2. Required Installation Standards and Materials Specifications

See ***Specifications for the Low-Income Weatherization Program*** on Commerce's Weatherization Documents webpage.

3. Best Practices

See ***EOW Field Guide***.

SECTION 5.1.2 AIR CONDITIONING AND HEATING SYSTEMS

A. Policy

1. Local agencies may replace, repair, or install home air conditioning or heating systems if at least one of the following conditions is met:

   a. Existing system is beyond repair.

   b. Existing system can be repaired but only at greater cost than replacement.

   c. Absence of an air conditioning system in the home of an at risk occupant where climate conditions warrant.

   d. Absence of a permanent adequate heating system.

   e. When an evaluation of cost-effectiveness determines the Savings to Investment Ratio (SIR) is 1.0 or greater.

   f. Health and safety.

2. Local agencies shall inspect and test the system(s) in each dwelling unit for safe operation prior to delivering weatherization services. Test all combustion systems for safety pre- and post-weatherization work. See **Section 9.4, *Combustion Safety*.**

3. Secondary systems must be inspected for safety, and any hazards identified must be documented in the client file. The client shall be notified in writing, including recommendations for future use or non-use. Maintenance, modification, or replacement of secondary systems is ordinarily the responsibility of the building owner. Removing, disconnecting, or correcting the secondary system hazards is only allowable if necessary for health and safety or if the SIR is 1 or greater.

4. Replacement furnaces will be 90 percent efficient unless:

   a. A 90 percent efficient unit is cost prohibitive (cannot be cost justified by an SIR of 1.0 or greater). Any replacement furnace must be at least 80 percent efficient and cost justified by an SIR of 1.0 or greater

   b. Leveraged funds may be used to reduce weatherization fund source investments in order to bring the SIR to 1.0 or greater.

5. Replacement of systems in rental units, other than low-income owned, also requires the following:

a. Local agency must inform the owner of their legal responsibilities and liabilities under RCW 59.18.060.

b. Local agency must work with the owner to make a contribution of at least 50 percent, since a new system is a capital improvement to the property.

(1) Owner may make either a cash or in-kind contribution. Contributions other than cash must benefit the client directly or the weatherization program.

(2) If owners refuse to participate, local agency options include the following:

(a) Defer project.

(b) Alternative financing.

(c) Negotiate extended rent freeze beyond normal property owner/agency agreement.

(d) File a covenant in lieu of the normal property owner/agency agreement assuring continued occupancy by low-income tenants for at least five years.

(e) Negotiate a combination of the above to allow weatherization funds to cover more than 50 percent of the cost of the system replacement.

6. The general practice of fuel switching when replacing heating systems is not permitted. See **Section 5.1.7, *Fuel Switching***, for acceptable conditions.

7. Local agencies will educate clients about the importance of regular maintenance.

   Clients with forced-air systems will be educated on the importance of replacing or cleaning air filters monthly during the heating or cooling season.

Allowable Costs

System replacement, repair, or installation is an allowable cost under DOE, HHS, BPA, and MM funds. Unless health and safety related, system replacement, repair, or installation must be included in the SIR calculation for all fund sources and in the DOE per home expenditure average. See **Chapter 6, *Allowable Costs***, for allowable expenditures.

Specific fund source limitations or allowances are as follows:

BPA: Local agencies must use all available matching funds for these repairs when such funds are available. Installation of heat pumps must be matched with at least a 50 percent payment from sources other than BPA funds. Units must be electrically heated in BPA service territory.

B. Procedure

1. Programmatic

   a. Client files must include the following documentation:

      (1) Verification the installed measure has an SIR of 1.0 or greater if it is based on energy efficiency.

      (2) Justification if Health and safety-related.

      (3) Condition of the system prior to weatherization.

      (4) A clear record of who analyzed or worked on the system, when, and what was done.

      (5) A clear record of duct assessment, sealing, and insulating for forced-air systems.

      (6) Combustion Safety Test Report results as applicable.

      (7) Cost comparison documentation.

      (8) Estimated repair costs used to justify replacement.

      (9) Paid invoices for all work contracted out or done by an outside technician.

      (10) All necessary measure-specific justification.

   b. See **Section 5.1.7, *Fuel Switching***.

   c. See **Chapter 6, *Allowable Costs***.

2. Required Installation Standards and Materials Specifications

   See ***Specifications for the Low-Income Weatherization Program*** on Commerce's Weatherization Documents Web page.

3. Best Practices

   See ***EOW Field Guide***.

SECTION 5.1.3 SOLID FUEL BURNING APPLIANCE SYSTEMS

A. Policy

1. Local agencies may repair and replace solid fuel burning appliance systems. Maintenance, repair, and replacement of primary indoor heating units is allowed where occupant health and safety is a concern. Maintenance and repair of secondary heating units is allowed. For more information on secondary systems, See **Section 5.1.2, *Air Conditioning and Heating Systems***.

   a. A supplemental audit for solid fuel burning appliance systems must be completed prior to repair or replacement. See **Exhibit 5.1.3A, *Solid Fuel Burning Appliance Systems Supplemental Audit Form***.

   b. Replacement is allowed if an evaluation (supplemental audit) performed by either the local agency or a heating system subcontractor determines either of the following, even when another heating system is in the home:

      (1) The life expectancy of a unit or system is less than one year.

      (2) It is more cost-effective to replace the unit or system than it is to perform necessary repairs.

2. If a local agency chooses to include repair and replacement of solid fuel burning appliance systems in its weatherization program, the following must be in place:

   a. Necessary permits must be obtained prior to heating system replacement.

   b. All applicable restrictions and code regulations must be met.

   c. Local agencies must have appropriate liability insurance.

   d. Local agencies must have a trained technician perform all installations, maintenance, and inspection. All work must receive approval from subsequent inspections.

3. Local agencies must provide consumer conservation education on safe operation, proper maintenance, and clean & efficient burning techniques.

4. Required Standards

   a. Solid Fuel Burning Devices Standards (Chapter 173-433 WAC)

   b. Certification and labeling by the National Fire Protection Association under NFPA 211, Standard for Chimneys, Fireplaces, Vents, and Solid Fuel-Burning Appliances.

The local fire marshal or building inspector will have the most current information on the standard.

c. Certification by the Underwriters Laboratory for systems with electrical parts.

d. Environmental Protection Agency emission standards or local standards if they are stricter.

e. The following also apply for mobile homes:

(1) Systems that are certified and labeled for mobile homes.

(2) Permits from the state Department of Labor and Industries.

5. Additional Requirements for Solid Fuel Burning Appliance Systems

Solid fuel burning appliance systems shall be provided with combustion air ducted directly to the appliance. Combustion air shall be provided as recommended by the manufacturer's specifications.

Exceptions:

Combustion air may be supplied to the room in which the solid fuel appliance system is located in lieu of direct ducting, in an existing home, provided that:

a. The appliance system is not designed for directly connected outside air or;

b. The existing construction prohibits the introduction of outside combustion air directly to the appliance system.

c. The combustion air source shall be located as close to the solid fuel burning appliance system as possible, shall be provided with a back draft damper, and shall be no less than six inches in diameter.

Allowable Costs

Repair and replacement of solid fuel burning appliance systems are allowable costs under DOE, HHS, and MM funds. These measures fall within the total health and safety measures and repairs limits (See **Section 5.3, *Health and Safety Measures and Repairs***.). These measures do not need to be included in the SIR calculation for all fund sources or in the DOE per home expenditure average. See **Chapter 6, *Allowable Costs***, for allowable expenditures. Providing fire extinguishers is an allowed health and safety cost only when a solid fuel burning appliance is present.

B. Procedure

1. Programmatic

   a. Client files must include the following documentation:

      (1) Supplemental audit (**Exhibit 5.1.3A, *Solid Fuel Burning Appliance Systems Supplemental Audit Form***.)

      (2) Clear record of who analyzed or worked on the heating system, when, and work performed.

      (3) Inspection approval.

      (4) Paid invoices for all work contracted out or performed by an outside heating technician.

      (5) All necessary measure-specific justification.

      (6) Delivery of consumer conservation education.

   b. Local agency files must include the following documentation:

      (1) Necessary permits.

      (2) Liability insurance.

   c. See **Chapter 6, *Allowable Costs***.

   d. See **Chapter 9, *Health & Safety***.

2. Required Installation Standards and Materials Specifications

   See ***Specifications for the Low-Income Weatherization Program*** on Commerce's Weatherization Documents Web page.

3. Best Practices

   See ***EOW Field Guide***.

SECTION 5.1.4 SPACE HEATERS

A. Policy

1. Local agencies may repair and replace space heaters under one of the following conditions:

   a. Energy efficiency if the total cost is justified using an evaluation of cost-effectiveness where the Savings to Investment Ratio (SIR) is 1.0 or greater.

   b. Client health and safety.

2. Local agencies must follow these general requirements for repair and replacement:

   a. Incidental repairs

      Make incidental repairs to space heaters as necessary to address health and safety issues.

   b. Provisions for working smoke detectors

      Inspect to ensure that a working smoke detector is installed on the same floor as the space heater. The cost of smoke detectors may be charged to Health and Safety Costs.

   c. Other safety hazards

      Check to ensure that no obvious building code violations or other safety hazards related to the space heater are evident, for example electric wiring and heater vent pipe.

   d. Permits and inspections

      Secure building permits where required and have qualified inspections made before any heater is put into operation. The cost of permits may be charged to Program Costs.

   e. Consumer conservation education

      Provide consumer conservation education on safety hazards and the proper operation of equipment, including the operation, testing, and battery replacement of smoke detectors.

3. Local agencies must follow the specific requirements listed below for space heater and fuel types.

   a. Space heater type

(1) Stand Alone Electric

(a) Stand Alone Electric space heaters are generally portable and do not include the following:

1) Baseboard units

2) Zoned heating system components

3) Other permanently installed electric heating units

(b) Repair, replacement, or installation is not allowed. Removal is recommended. Inform client of hazards and collect a signed waiver if client refuses removal.

(c) Check circuitry to ensure adequate power supply for existing space heaters.

(2) Unvented combustion space heaters

(a) Not allowed as primary heat source.

(b) Removal is required, except as secondary heat where the unit conforms to ANSI Z21.11.2. Units that do not meet ANSI Z21.11.2 must be removed prior to weatherization but may remain until a replacement heating system is in place.

(c) Inform client of dangers of unvented space heaters. CO, moisture, and NO_2, can be dangerous even if CO alarm does not sound.

(3) Vented combustion space heaters

(a) Should be treated as furnaces. See **Section 5.1.2, *Air Conditioning and Heating Systems***

(b) Oil-fired space heaters (always vented), vented kerosene space heaters, and vented gas space heaters should be treated as if they are furnaces.

Local agencies may perform tune-ups and clean heater units, vents, and ducts.

(c) See the following information on fuel types for the repair and replacement of vented gas and kerosene space heaters.

b. Fuel type

(1) Gas

(a) Unvented gas space heaters are prohibited.

(b) Repair of vented gas heaters is allowed, provided that the following concerns are addressed and documented in the client file:

1) Cost benefits of repair vs. replacement.

2) Methods to deal with health and safety concerns for the occupants.

3) Identification of, and compliance with, applicable codes.

4) Consumer conservation education on the proper use and maintenance of the equipment.

(c) Replacement of a gas space heater is only allowed when the existing unit is in poor mechanical condition or poses health and safety risks for other reasons.

1) Gas space heaters may not be installed in bedrooms or bathrooms or comparable areas of shelters and group homes.

2) Replacement should be with another gas heater.

(2) Kerosene

(a) Unvented kerosene space heaters are prohibited.

(b) Repair of vented kerosene space heaters is allowed, provided that the following concerns are addressed and documented in the client file:

1) Cost benefits of repair vs. replacement.

2) Methods to deal with health and safety concerns for the occupants.

3) Identification of, and compliance with, applicable codes.

4) Consumer conservation education on the proper use and maintenance of the equipment.

(c) Repairs to existing vented kerosene heaters may be considered when they are the only source of heat and no reasonable alternative exists.

Allowable Costs

Repair and replacement of space heaters are allowable costs under DOE, HHS, BPA, and MM funds. Unless health and safety related, repair and replacement must be included in the SIR calculation for all fund sources and in the DOE per home expenditure average. See **Chapter 6, *Allowable Costs***, for allowable expenditures.

Specific fund source limitations or allowances are as follows:

BPA: Units must be electrically heated in BPA service territory.

B. Procedure

1. Programmatic

   a. Client files must include the following documentation:

      (1) Verification the measure has an SIR of 1.0 or greater if it is based on energy efficiency.

      (2) Justification if health and safety-related.

      (3) All necessary measure-specific justification.

      (4) Smoke detector installation as applicable.

      (5) Copies of mechanical permits where required and results of inspections.

      (6) Delivery of consumer conservation education.

   b. See **Chapter 6, *Allowable Costs***.

   c. See **Chapter 9, *Health and Safety***.

2. Required Installation Standards & Materials Specifications

   Not applicable.

3. Best Practices

   Not applicable.

SECTION 5.1.5 WATER HEATERS

A. Policy

1. Local agencies are obliged to consider repairing water heaters, including replacement of elements, wiring, and thermostats.

   a. Local agencies may replace a water heater if the cost of repair exceeds the cost of replacement or if the broken water heater is more than 10 years old.

   b. When a hot water heater is not repairable, local agencies may replace it with an energy efficient model with the lowest installed cost.

2. Local agencies may replace water heaters under one of the following conditions:

   a. Energy efficiency if the total cost is justified using an evaluation of cost-effectiveness where the Savings to Investment Ratio (SIR) is 1.0 or greater.

   b. Client health and safety.

3. Local agencies shall inspect and test the system(s) in each dwelling unit for safe operation prior to delivering weatherization services.

   Test all combustion systems for safety pre- and post-weatherization work.

4. Replacement of systems in rental units, other than low-income owned, also requires the following:

   a. Local agency must inform the owner of their legal responsibilities and liabilities under RCW 59.18.060.

   b. Local agency must work with the owner to make a contribution of at least 50 percent, since a new system is a capital improvement to the property.

      (1) Owner may make either a cash or in-kind contribution. Contributions other than cash must benefit the client directly or the weatherization program.

      (2) If owners refuse to participate, local agency options include the following:

         (a) Defer project.

         (b) Alternative financing.

         (c) Negotiate extended rent freeze beyond normal property owner/agency agreement.

(d) File a covenant in lieu of the normal property owner/agency agreement assuring continued occupancy by low-income tenants for at least five years.

(e) Negotiate a combination of the above to allow weatherization funds to cover more than 50 percent of the cost of the system replacement.

Allowable Costs

Water heater repair and replacement are allowable costs under DOE, HHS, BPA, and MM funds. Unless health and safety related, repair and replacement must be included in the SIR calculation for all fund sources and in the DOE per home expenditure average. See **Chapter 6, *Allowable Costs***, for allowable expenditures.

Specific fund source limitations or allowances are as follows:

BPA: Units must be electrically heated in BPA service territory.

B. Procedure

1. Programmatic

   a. Client files must include the following documentation:

      (1) Verification the installed measure has an SIR of 1.0 or greater if it is based on energy efficiency.

      (2) Justification if health and safety-related.

      (3) Condition of the system prior to weatherization.

      (4) A clear record of who analyzed or worked on the system, when, and what was done.

      (5) Combustion Safety Test Report results as applicable.

      (6) Cost comparison documentation.

      (7) Estimated repair costs used to justify replacement.

      (8) Paid invoices for all work contracted out or done by an outside technician.

      (9) All necessary measure-specific justification.

   b. See **Chapter 6, *Allowable Costs***.

2. Required Installation Standards and Materials Specifications

   Not applicable.

3. Best Practices

   See ***EOW Field Guide***.

SECTION 5.1.6 REFRIGERATOR REPLACEMENT

A. Policy

1. Local agencies may replace refrigerators with weatherization funding when the demonstrated savings to investment ratio (SIR) is 1.0 or greater.

   a. Local agencies must use Commerce approved methods to determine the SIR. These methods include:

      (1) TREAT (Targeted Residential Energy Analysis Tool)

      (2) Weatherization program on-line tool. See **Exhibit 5.1.6A, *Economic Analysis of Refrigerator Replacement*** (***Refrigerator Replacement Audit Tool*** on the Commerce Weatherization page).

      (3) Data logging of existing refrigerator

   b. Leveraged funds can be used to bring the SIR of a marginally cost-effective measure to 1.0 or greater.

   c. All units in an eligible multi-unit project may receive a replacement refrigerator if the SIR is 1.0 or greater.

2. Residents must agree to the removal of the old refrigerator and all non-functioning, unused, or underused refrigerators by the local agency.

3. The old refrigerator must be removed from the property and disposed of properly per Section 608 of the 1990 Clean Air Act, as amended by 40 CFR 82, Subpart F, 1995. See ***Specifications for the Low-Income Weatherization Program*** for proper disposal methods.

4. Ownership of the replacement refrigerator falls to whomever owned the refrigerator that was replaced, either the owner/occupant, property owner, or renter.

Allowable Costs

Refrigerator replacement, including costs associated with CFC disposal, is an allowable cost under DOE, HHS, BPA, and MM funds. Refrigerator replacement must be included in the SIR calculation for all fund sources and in the DOE per home expenditure average. See **Chapter 6, *Allowable Costs***, for allowable expenditures.

Specific fund source limitations or allowances are as follows:

BPA: Funds will cover 100 percent of the refrigerator cost. Funds may be used for non-electrically heated homes in BPA service territory.

B. Procedure

1. Programmatic

   a. Client files must include the following documentation:

      (1) Verification installed measure has an SIR of 1.0 or greater using proven methods.

      (2) All necessary measure-specific justification.

      (3) Client approval.

      (4) Ownership status of the replaced refrigerator.

      (5) Copies of the manufacturer's warranty and client's signature indicating receipt of original warranty.

      (6) Refrigerator disposal method.

      (7) Reclaimed refrigerant disposal method.

   b. See **Exhibit 5.1.6A, *Economic Analysis of Refrigerator Replacement*** (***Refrigerator Replacement Audit Tool*** *on Commerce's Weatherization page).*

   c. See **Chapter 6, *Allowable Costs***.

   d. See **Chapter 9, *Health & Safety***.

2. Required Installation Standards and Materials Specifications

   See ***Specifications for the Low-Income Weatherization Program*** on Commerce's Weatherization Documents Web page.

3. Best Practices

   See ***EOW Field Guide***.

SECTION 5.1.7 FUEL SWITCHING

A. Policy

1. Commerce does not permit the general practice of non-renewable fuel switching when replacing heating systems and hot water tanks.

   a. Local agencies must notify Commerce in writing (email acceptable) if they intend to switch fuels as part of their weatherization services.

   b. Local agencies may switch fuels under the following conditions:

      (1) Energy efficiency if the total cost is justified using an evaluation of cost-effectiveness where the Savings to Investment Ratio (SIR) is 1.0 or greater.

      (2) Client health and safety.

2. The switched-fuel unit cannot exceed the cost of replacement using the existing fuel unless the difference comes from sources other than Commerce.

3. When switching from electric to oil or gas, all costs associated with the installation of a gas heating system or water heater, and all required elements of the new heating system (providing a new supply line, flue, chimney, ducts), must be considered as part of the total cost.

Allowable Costs

Fuel switching is an allowable cost under DOE, HHS, and MM funds with prior Commerce written notification. Unless health and safety related, fuel switching must be included in the SIR calculation of each fund source and in the DOE per home expenditure average. See **Chapter 6, *Allowable Costs***, for allowable expenditures.

B. Procedure

1. Programmatic

   a. Submit written notification (email acceptable) to assigned Commerce field representative. Include supporting documentation if health and safety related.

   b. Client files must include the following documentation:

      (1) Copy of written notification submitted to Commerce.

      (2) A complete cost analysis justifying the work, including verification the installed measure has an SIR of 1.0 or greater if it is based on energy efficiency.

(3) Justification if health and safety-related.

(4) All necessary measure-specific justification.

c. See **Chapter 6, *Allowable Costs***.

2. Required Installation Standards & Materials Specifications

Not applicable.

3. Best Practices

See ***EOW Field Guide***.

SECTION 5.1.8 CERTIFICATION OF INSULATION

A. Policy

1. Local agencies must complete a certificate of insulation form for each dwelling unit that receives ceiling, wall, floor, perimeter, or duct insulation.

   The certificate will include all of the information shown in **Exhibit 5.1.8A,*Certificate of Insulation***. This form is an example of an acceptable format for this certification requirement.

2. The certificate must be signed by one of the following as applicable:

   a. Subcontractor, if subcontractor performs the work.

   b. Crew chief, if the local agency's crew performs the work.

B. Procedure

1. Programmatic

   a. Local agencies must give the homeowner the original certificate, place a copy in the agency file, and post a copy in the attic or crawl space of the dwelling unit as appropriate.

   b. See **Exhibit 5.1.8A, *Certificate of Insulation***.

   c. Local agencies can contact the Office Administrative III within the Housing Improvements and Preservation unit for copies of the certificate shown in **Exhibit 5.1.8A**.

2. Required Installation Standards and Materials Specifications

   See ***Specifications for the Low-Income Weatherization Program*** on Commerce's Weatherization Documents Web page.

3. Best Practices

   Not applicable.

SECTION 5.1.9 CLOSED WALL CAVITY INSULATION

A. Policy

1. All closed wall cavities that can be insulated shall be insulated with a loose fill insulation product designed specifically for dense pack applications. Cellulose insulation used in an enclosed cavity shall be installed at 3.5 pounds per cubic foot or greater density. Blown fiberglass, mineral fiber, rock and slag wool, or spray foam used in an enclosed cavity shall be installed at or above the manufacturer's recommended density to limit airflow that corresponds to an air permeance value of ≤ 3.5 cfm/sq ft at 50 Pascals, as measured using BPI-102 "Standard for Air Resistance of Thermal Insulation Used in Retrofit Cavity Applications – Material Specification" or ASTM C 522, E 283, or E 2178.

   Exceptions:

   a. High building tightness limit is present.

   b. Other situations exist that are documented and approved in advance by Commerce.

2. Installed measure must have an SIR of 1.0 or greater.

Allowable Costs

Closed wall cavity insulation is an allowable cost under DOE, HHS, BPA and MM funds. The measure must be included in the SIR calculation for all fund sources and in the DOE per home expenditure average. See **Chapter 6, *Allowable Costs***, for allowable expenditures.

Specific fund source limitations or allowances are as follows:

BPA: Units must be electrically heated in BPA service territory.

B. Procedure

1. Programmatic

   a. Client files must include the following documentation:

      (1) Copy of the certificate of insulation.

      (2) Verification the installed measure has an SIR of 1.0 or greater.

      (3) All necessary measure-specific documentation.

b. Local agencies must give the homeowner the original certificate of insulation and post a copy in the attic or crawl space of the dwelling unit as appropriate.

c. See **Exhibit 5.1A, *Priority List of Weatherization Measures***.

d. See **Section 5.1.8, *Certification of Insulation***.

e. See **Exhibit 5.1.8A, *Certificate of Insulation***.

f. See **Chapter 6, *Allowable Costs***.

2. Required Installation Standards and Materials Specifications

   See ***Specifications for the Low-Income Weatherization Program*** on Commerce's Weatherization Documents Web page.

3. Best Practices

   See ***EOW Field Guide***.

SECTION 5.2 ENERGY-EFFICIENT LIGHTING

A. Policy

1. Retrofit of lighting fixtures, replacement of incandescent screw-in bulbs with compact fluorescent screw-in bulbs (CFLs), and replacement of halogen or incandescent torchiere lamps with CFL torchieres are allowable weatherization measures under the following provisions:

   a. Eligible units

      (1) Owner-occupied dwellings.

      (2) Rental units where tenants pay electric bills.

      Do not install lights in locations where the building owner pays the electric bills, such as common areas or master-metered buildings except when building owner is a nonprofit organization.

   b. Retrofit of lighting fixtures and replacement of halogen or incandescent torchiere lamps with CFL torchieres are allowable if costs are justified with an SIR calculation of 1.0 or greater.

   c. All measures must directly benefit low-income tenants.

2. All incandescent screw-in bulbs can be replaced with compact fluorescent screw-in bulbs (CFLs).

3. Every effort should be made to arrange cost sharing with utilities and use utility funds first.

4. Local agencies must provide residents with information on the following:

   a. CFL features

   b. Potential savings

   c. Proper use and care

   d. Use and replacement limitations

   e. Where to purchase replacement bulbs

Allowable Costs

Retrofit of lighting fixtures, replacement of incandescent screw-in bulbs with compact fluorescent screw-in bulbs (CFLs), and replacement of halogen or incandescent torchiere lamps with CFL torchieres are allowable costs under DOE, HHS, BPA, and MM funds.

Retrofit of fixtures and replacement of halogen or incandescent torchiere lamps with CFL torchieres must be included in the SIR calculation for all fund sources and in the DOE per home expenditure average. See **Chapter 6, *Allowable Costs***, for allowable expenditures.

Specific fund source limitations or allowances are as follows:

BPA: Funds may be used for non-electrically heated homes in BPA service territory.

B. Procedure

1. Programmatic

   a. Client files must include the following documentation:

      (1) Receipts or inventory reduction paperwork.

      (2) For lighting fixture retrofits and replacement of halogen or incandescent torchiere lamps with CFL torchieres, verification installed measures have an SIR of 1.0 or greater.

      (3) All necessary measure-specific justification.

      (4) Delivery of consumer conservation education.

   b. See **Chapter 6, *Allowable Costs***.

2. Required Installation Standards and Materials Specifications

   See ***Specifications for the Low-Income Weatherization Program*** on Commerce's Weatherization Documents Web page.

3. Best Practices

   See ***EOW Field Guide***.

SECTION 5.3 HEALTH AND SAFETY MEASURES

A. Policy

1. Prior to providing weatherization services, energy-related health and safety hazards necessary to install weatherization materials, must be eliminated. Any hazards created as a result of installing weatherization materials must be eliminated. Energy-related health and safety measures and repairs are intended to protect building occupants and workers. See **Chapter 9, *Health and Safety***, for additional information.

2. Deferral may be necessary if health and safety issues cannot be adequately addressed. See **Section 5.5, *Deferral Standards.*** Agencies must inform clients of any health and safety hazards that may be beyond the scope of the weatherization program.

Allowable Costs

Energy-related health and safety measures and repairs are allowable costs under DOE, HHS, BPA, and MM funds where, cumulatively, they do not exceed reasonable costs. Health and safety measures are allowed only where energy efficiency measures are identified for installation. These measures do not need to be included in the SIR calculation for all fund sources or in the DOE per home expenditure average. See **Chapter 6, *Allowable Costs***, for allowable expenditures.

Specific fund source limitations or allowances, See **Exhibit 6, *Fund Matrix*** **and** **Exhibit6.1, *Fiscal Definitions*.**

There are some instances where, depending on circumstances, the measure can be considered either a health and safety measure or an energy conservation measure (e.g. furnaces). In those instances where the measure has a cost-effective savings-to-investment ratio (SIR) of one (1) or greather, the measure should be treated as a weatherization efficiency measure.

Referenced in: 10 CFR 440.16(h)
10 CFR 440.18(c)(15)
10 CFR 440.21(c)
10 CFR 440.21(e)(5)
WPN 08-1, 2007
WPN 07-1, 2006
WPN 05-1, 2004
WPN 03-1, 2002
WPN 02-6, 2002
WPN 11-6, 2011 (replaces WPN 02-5, 2002)
WAP Health & Safety Plan
EOW Field Guide
HHS Special Terms & Conditions
BPA Special Terms and Conditions

B. Procedure

1. Programmatic

   a. Client files must include the following documentation:

      (1) All necessary measure-specific justification.

   b. Energy-related health and safety costs must be budgeted, tracked, and reported separately from weatherization measure costs and weatherization-related repair costs in local agency accounts, assessment/audit forms, and in WIDS.

   c. See **Chapter 6, *Allowable Costs*** **and** **Exhibit 6, *Fund Matrix***.

   d. See **Chapter 9, *Health & Safety***.

2. Required Installation Standards & Materials Specifications

   Not applicable.

3. Best Practices

   See ***EOW Field Guide***.

SECTION 5.3.1 TESTING FOR EXCESSIVE CARBON MONOXIDE (CO)

See **Section 9.4, *Combustion Safety***

SECTION 5.3.2 INSTALLATION OF CARBON MONOXIDE (CO) DETECTORS

See **Section 9.5, *Smoke, Carbon Monoxide Detectors, and Fire Extinguishers***

SECTION 5.3.3 DIAGNOSTIC TESTS AND AIR SEALING

A. Policy

1. Local agencies must perform diagnostic tests prior to installment of weatherization measures and upon completion of each project based on the following:

   a. Type of residence

   b. Site conditions

2. Local agencies must perform air sealing where it is determined by a weatherization audit to be effective based on one of the following considerations:

   a. Health

   b. Safety

   c. Building durability

   d. Energy efficiency if the total cost is justified using an evaluation of cost-effectiveness where the Savings to Investment Ratio (SIR) is 1.0 or greater.

Allowable Costs

Diagnostic tests and air sealing are allowable costs under DOE, HHS, BPA, and MM funds. Both must be included in the SIR calculation for all fund sources and in the DOE per home expenditure average. See **Chapter 6, *Allowable Costs***, for allowable expenditures.

Specific fund source limitations or allowances are as follows:

BPA: Units must be electrically heated in BPA service territory.

B. Procedure

1. Programmatic

   a. Client files must include the following documentation:

      (1) An **Exhibit 5.S3A, *Diagnostic Test Report***.

      (2) Paid invoices for materials, measures, repairs, or modifications.

(3) Verification the installed measure has an SIR of 1.0 or greater if it is based on energy efficiency.

(4) All necessary measure-specific justification.

b. See **Chapter 6, *Allowable Costs***.

2. Required Installation Standards and Materials Specifications

See ***Specifications for the Low-Income Weatherization Program*** on Commerce's Weatherization Documents Web page.

3. Best Practices

See ***EOW Field Guide***.

SECTION 5.4 WEATHERIZATION-RELATED REPAIR

A. Policy

Building rehabilitation is beyond the scope of the Weatherization Assistance Program. Homes with conditions that require more than incidental repair should be deferred or funded with an allowable funding source. Local agencies may perform repairs needed to protect weatherization measures or their function. See **Exhibit 5.4A, *Weatherization-Related Repairs***, for examples of allowable repairs repairs.

Allowable Costs

Weatherization-related repairs are an allowable cost under DOE, HHS, BPA, and MM funds. Weatherization-related repairs (both individual measures and the total package) must be included in the SIR calculation regardless of fund source and in the DOE per home expenditure average (building cost calculation). See **Chapter 6, *Allowable Costs***, for allowable expenditures.

Exceptions:

a. Weatherization-related repairs funded with Matchmaker funds are not included in the SIR calculation.

b. Weatherization-related repairs funded with LIHEAP funds are waived from the SIR requirement for the period October 1, 2011 through September 30, 2015, and are not included in the SIR calculation.

c. For all Wx units utilizing waiver, where LIHEAP WRR funding exceeds $5000, Local Agencies shall notify Commerce in writing (email acceptable) and attach their WRR justification to the Wx unit in WIDS

Specific fund source limitations or allowances, See **Exhibit 6, *Fund Matrix* and Exhibit6.1 *Fiscal Definitions*.**

B. Procedure

2. Programmatic

a. Client files must include or be supported by the following documentation:

(1) Description of repairs and related measures.

(2) Justification for repairs made, including electronic or printed photographs.

(3) Justification for measures skipped associated with weatherization-related repair.

(4) Verification installed measures have an SIR of 1.0 or greater.

(5) All necessary measure-specific justification.

(6) Paid invoices for materials, measures, repairs, or modifications.

b. Weatherization-related repair costs must be budgeted, tracked, and reported separately from energy saving measure and health and safety costs in local agency accounts and assessment/audit forms.

c. See **Section 5.9, *Matchmakers Policy*.**

d. See **Exhibit 5.1A, *Priority List of Weatherization Measures***.

e. See **Chapter 6, *Allowable Costs***.

f. See **Chapter 9, *Health & Safety***.

3. Required Installation Standards and Materials Specifications

Not applicable.

4. Best Practices

Not applicable.

SECTION 5.5 DEFERRAL STANDARDS

A. Policy

1. Local agencies may defer weatherization work if they encounter problems that are beyond the scope of the Weatherization Assistance Program.

   Deferring weatherization work does not mean assistance will never be available, but that any work must be postponed until problems can be resolved and alternative sources of help are found as necessary.

2. Local agencies must develop guidelines and a standardized form. See **Exhibit 5.5A, *Weatherization Deferral Form***, for an example of a standardized form.

   Deferral guidelines may include the following:

   a. The client has known health conditions that prohibit the installation of insulation and other weatherization materials.

   b. The building structure or its mechanical systems, including electrical and plumbing, are in such a state of disrepair that failure is imminent and the conditions cannot be resolved in a cost-effective manner.

   c. The house has sewage or other sanitary problems that would further endanger the client and the weatherization installers if weatherization work were performed.

   d. The house has been condemned or electrical, heating, plumbing, or other equipment has been "red tagged" by a local or state building official or utilities.

   e. Moisture problems are so severe they cannot be resolved under existing health and safety measures and minor repairs.

   f. Dangerous conditions exist due to high carbon monoxide levels in combustion appliances and cannot be resolved under existing health and safety measures.

   g. The client is uncooperative, abusive, or threatening to crew, auditors, inspectors, contractors, or others who must work on or visit the house.

   h. The extent and condition of lead-based paint in the house would potentially create further health and safety hazards. See *Deferral Policy Related to Lead-Based Paint* in the *WAP Health & Safety Plan.*

   i. In the judgment of the energy auditor, conditions exist which may endanger the health and/or safety of the work crew or contractor. Work should not proceed until the condition is corrected.

3. Local agencies must actively pursue all alternative options on behalf of the client, including referrals, and use good judgment in dealing with difficult situations.

B. Procedure

1. Programmatic

   a. Local agency must provide clients with deferral documentation. If the property is a rental, property owners must receive a copy.

   b. Client files must include a copy of deferral documentation.

   c. Deferral documentation must include the information in **Exhibit 5.5A, *Weatherization Deferral Form***. Local agencies may use this form or equivalent documentation.

   d. See **Chapter 9, *Health and Safety***.

2. Required Installation Standards & Materials Specifications

   See ***Specifications for the Low-Income Weatherization Program*** on Commerce's Weatherization Documents Web page.

3. Best Practices

   Not applicable.

SECTION 5.6 COORDINATION WITH UTILITIES AND RELATED PROGRAMS

A. Policy

1. Local agencies must identify and coordinate with related energy conservation projects within their service area. Such projects include those offered through other federal programs, state agencies, energy vendors, and local or privately funded programs.

   All coordinated efforts must meet or exceed Commerce standards.

2. Local agencies are expected to participate in local efforts to enhance coordination and cooperation.

B. Procedure

1. Programmatic

   a. Local agencies may share the responsibility of providing weatherization services using a variety of coordination methods, including:

      (1) Energy audits

      (2) Specific weatherization measures (such as water heater blankets, heating source repair or modification, replacement of lighting fixtures and bulbs)

      (3) Outreach

      (4) Program publicity

      (5) Other

   b. Local agencies must submit their coordination plan as part of the annual General Weatherization Work plan.

   c. See **Section 8.2, *General Weatherization Work Plan***.

2. Required Installation Standards & Materials Specifications

   Not applicable.

3. Best Practices

   Not applicable.

SECTION 5.7 RENEWABLE ENERGY SYSTEMS

A. Policy

1. Section 206 of the Energy Policy Act of 2005 (EPACT 2005) amended the Energy Conservation and Production Act (42 U.S.C. 6861 et seq.) to clarify that assistance under Department of Energy's (DOE) Weatherization Assistance Program for low-income persons may be provided for renewable energy systems and to provide definitions and criteria to be used in assessing eligibility. DOE amended their Final Rule, 10 CFR 440, to codify the EPACT provisions.

2. EPACT 2005 sets a ceiling of $3,149 per dwelling for such assistance, subject to annual adjustments as provided in the statute.

   a. These funds are not in addition to the current average cost per unit. The maximum represents the cumulative total average expenditures allowable for labor, materials, and related matters per unit.

   b. See Section 5.6, Use of Weatherization Funds for Renewable Energy Systems, in Weatherization Program Notice (WPN) 07-1, 2006 (**http://www.waptac.org/sp.asp?id=6878**) for guidance on how to apply the average ceilings on funds for units using renewable energy systems.

3. EPACT 2005 requires DOE to establish a procedure under which a manufacturer of a technology or system may request the Secretary of Energy to certify the technology or system as an eligible renewable energy system. Approved renewable energy systems will be listed in Appendix A, Standards for Weatherization Materials, of the DOE Final Rule, 10 CFR 440 **(http://www.waptac.org/si.asp?id=496**). Solar Water Heating Devices which conform to SRCC (Solar Rating and Certification Corporation) OG 300 are an example of an approved renewable energy system.

Allowable Costs

Approved renewable energy systems are an allowable cost under DOE funds. Policies for HHS, BPA, and MM funds will be determined. See **Chapter 6, *Allowable Costs***, for allowable expenditures.

Specific fund source limitations or allowances are as follows:

BPA: Units must be electrically heated in BPA service territory.

B. Procedure

1. Programmatic

   a. Client files must include the following documentation:

      (1) Verification installed measures have an SIR of 1.0 or greater as determined by TREAT or the ***Prioity List of Insulation Measures* (Exhibit 5.1A)**.

      (2) All necessary measure-specific justification.

   b. See Department of Energy ***Weatherization Program Notice 08-1, 2007*.**

2. Required Installation Standards & Materials Specifications

   Not applicable.

3. Best Practices

   Not applicable.

SECTION 5.9 Matchmakers Policy

A. Policy

1. Matchmaker Tier 1 follows existing Weatherization Manual.

2. Matchmaker Program Overview

   (1) The Matchmakers Program (MM) is a leveraging program that maximizes available state capital funds with matching resources received from utilities, property owners, and other entities and sources. The MM provides services to low or very low-income households for:Weatherization

   (2) Emergency and minor repair

   (3) Moderate rehabilitation*

   (4) Manufactured or mobile home (MH) replacement*

   *Subject to available funds authorized by Commerce

3. Match Requirements

   a. Every effort will be made to secure match, which can be in the form of a cash or in-kind contribution.

   b. For rental units, an owner contribution is required unless the owner meets low-income eligibility requirements. Rental owner contribution must be documented in the client file.

B. Procedure

Tiered Service Delivery

Tier	Title	Dollar Limit	Purpose	Grant or Loan**	Eligible Applicant
1	Weatherization Measures (WxM), Health & Safety (H&S), and Weatherization-Related Repair (WRR) Measures	Up to $10,000 Total IMC limit for each unit	Install weatherization measures make repairs necessary to eliminate hazards within a structure that allow for the installation of weatherization materials and make repairs necessary for the effective performance or preservation of weatherization materials, not subject to SIR. (See Chapter 9 and Section 5.4)	Grant	•Owner occupied •Rental
2	Moderate Rehabilitation*	$10,001 to $25,000	Perform repairs necessary for the installation of weatherization measures and to preserve affordable housing. Funds are not intended to be used for cosmetic repairs.	Deferred loan preferably interest bearing; interest determined by local agency	•Owner occupied
3	Mobile Home Replacement (MHR)*	up to $60,000 per unit.	Gives agencies an option of replacing older substandard MHs that are not cost efficient to repair, under the incorporated Mobile Home Replacement Program Guidelines.	loan with minimal interest	

** Subject to available funding. Policies to be determined. Training is required to employ Moderate Rehab and MHR. Training to be defined.*

***To better ensure prudent use of limited funds as well as expanding leveraging to include loan repayments.*

CHAPTER 6 ALLOWABLE COSTS

SECTION 6.1 GENERAL STANDARDS FOR ALLOWABLE COSTS

A. Policy

1. Allowable weatherization costs must be:

    a. Reasonable for the performance of the contract and of benefit to the program for which the funds are provided.

    b. Allocated to the contract under these policies.

    c. Conform to any limitations or exclusions set forth in these policies or in the contract as to type or amount of cost of items.

    d. Consistent with policies and procedures that apply uniformly to other activities of the organization and are accorded consistent treatment.

    e. Determined in accordance with generally accepted accounting principles. See "The Yellow Book" (OMB Circular A-122) issued by the federal Office of Management and Budget (www.whitehouse.gov/omb/circulars/).

    f. Adequately documented.

2. Correction of pre-existing code compliance issues is not an allowable cost other than where weatherization measures are being conducted.

B. Procedure

1. Local agency files must include all required expenditure documentation.

2. See funding source Special Terms and conditions, policies and procedures, or policies and guidelines for allowable costs specific to each funding source.

3. See **Chapter 5, *Providing Weatherization Services***, for allowable weatherization measures and fund source limitations & allowances.

SECTION 6.2 GENERAL STANDARDS OF FISCAL ACCOUNTABILITY

A. Policy

1. Method of Compensation

   Commerce will reimburse local agencies for all allowable costs upon receipt of authorized requests for reimbursement as directed by Commerce. See **Section 8.7, *Reporting and Reimbursement of Expenses***.

2. Accounting and Auditing

   Local agencies are responsible for complying with all applicable guidelines and procedures, demonstrating responsible management of cash flow, inventory control, equipment purchase, and administrative costs. See **Section 6.8, *Audits***.

3. Subcontracting

   a. If a local agency wants to subcontract work under this program, a description of its subcontracting process and copies of pertinent contracts must be submitted to Commerce in its annual General Weatherization Work Plan. See **Section 8.2, *General Weatherization Work Plan***.

   b. Subcontractors must be selected using competitive procedures among potential bidders for weatherization services. See **Section 8.4, *Subcontracting***.

4. Record-keeping

   a. Local agencies must keep records that fully disclose the following:

      (1) Amount and disposition of funds received.

      (2) Total Installed Measure Cost of a weatherization project.

      (3) Total Building Cost by funding source,

      (4) Source and amount of funds used from all funding sources.

   b. Records must be retained for six years from the last financial audit or the completion of the length of commitment, whichever is later.

Referenced in: 10 CFR 440.2
10 CFR 440.23
10 CFR 440.24
10 CFR 440.25
10 CFR 600
OMB Circular A-87
OMB Circular A-122
Commerce General Terms and Conditions
DOE Special Terms and Conditions
HHS Special Terms and Conditions
MM Special Terms and Conditions

5. Reports

   Local agencies will provide reports or answers in writing to specific questions or surveys requested by Commerce or its funding sources by the specified deadline. See **Chapter 8, *Program Management, Administration, and Reporting*.**

6. Equipment Purchases

   a. All purchases of equipment with values exceeding $5,000 require Commerce written approval.

   b. Requests for vehicles purchased with DOE funding require prior written DOE approval. Allow 90 days for DOE review.

   c. See **Section 6.6, *Equipment***, for additional policies, including procurement with multiple fund sources and equipment sharing with non-weatherization programs.

7. Securing Commerce's Interest in Motor Vehicles, Equipment, and Fixtures

   Local agencies are responsible for ensuring Commerce's financial interest in motor vehicles, equipment, and fixtures with purchase values of $10,000 or more, purchased under Commerce contracts. See **Section 6.6, *Equipment***, for additional policies.

8. Inventory Control

   Local agencies are required to maintain an inventory of materials and non-expendable tools and equipment. See **Section 8.12, *Inventory Control***.

9. Authorized Expenditures

   OMB (Office of Management and Budget) Circular A-87, Cost Principles for State, Local, and Indian Tribal Governments, and OMB Circular A-122, Cost Principles for Nonprofit Organizations, are used as general guidelines for determining which weatherization costs are allowed.

   a. Exceptions exist where costs conform to specific categories in the applicable contract, policies and procedures, weatherization budget, state law, or local ordinance.

   b. Commerce determines the proper interpretation of the federal or state procedures as they relate to costs allowed or prohibited under this program.

Referenced in: 10 CFR 440.2
10 CFR 440.23
10 CFR 440.24
10 CFR 440.25
10 CFR 600
OMB Circular A-87
OMB Circular A-122
Commerce General Terms and Conditions
DOE Special Terms and Conditions
HHS Special Terms and Conditions
MM Special Terms and Conditions

B. Procedure

1. Local agency files must include the following documentation:

   a. Description of agency subcontracting process and copies of pertinent contracts as submitted in the General Weatherization Work Plan.

   b. All necessary records that disclose fiscal accountability.

2. See **Section 8.7, *Reporting and Reimbursement of Expenses***.

3. See **Section 6.8, *Audits***.

4. See **Section 8.2, *General Weatherization Work Plan***.

5. See **Section 8.4, *Subcontracting***.

6. See **Chapter 8, *Program Management, Administration, and Reporting***.

7. See **Section 6.6, *Equipment***, for procedures related to equipment purchase and securing Commerce's interest in motor vehicles, equipment, and fixtures.

8. See **Section 8.12, *Inventory Control***.

9. See **Chapter 5, *Providing Weatherization Services***, for allowable weatherization measures and fund source limitations & allowances.

10. See OMB Circular A-87, Cost Principles for State, Local, and Indian Tribal Governments.

11. See OMB Circular A-122, Cost Principles for Nonprofit Organizations.

Referenced in: 10 CFR 440.2
10 CFR 440.23
10 CFR 440.24
10 CFR 440.25
10 CFR 600
OMB Circular A-87
OMB Circular A-122
Commerce General Terms and Conditions
DOE Special Terms and Conditions
HHS Special Terms and Conditions
MM Special Terms and Conditions

SECTION 6.3 ADMINISTRATIVE COSTS

A. Policy

1. Administrative costs are costs associated with those functions of a general nature not clearly identifiable with a program. These functions include planning, budgeting and accounting, and establishment and direction of local agency policies, goals, and objectives.

2. Allowable administrative costs include costs associated with functions such as:

   a. General board/committee meetings.

   b. Executive Director.

   c. General staff meetings.

   d. Office management.

   e. Accounting, auditing, and budgeting.

   f. Corporate legal services.

   g. Personnel management.

   h. Purchasing and distribution of supplies.

   i. Insurance and bonding.

   j. Receptionist, switchboard, mail distribution, filing, and other central clerical services.

   k. Word processing and computer services.

   l. Computer equipment used for administrative functions.

   m. Organizational and procedure studies.

   n. General record keeping.

   o. Office space/facilities lease or rental – including outstations.

   p. Utilities in the office space/facilities.

q. Postage.

r. Duplicating/copying.

s. Telephone equipment and services.

t. Administrative staff training.

u. Applicable state and local taxes.

v. General personal liability and property insurance (Liability insurance for onsite work is a program cost. See **Section 6.4, *Program Operation Costs***.).

DOE allows general personal liability and property insurance to be charged to the liability line item of the contract.

3. Charge direct supervision of program services to those functions, not to administration.

Personnel typically identified as administration may relate, at times, more directly to program activities than to administration. Even some hours of "management staff" may be properly allocated to program support costs, but only if the positions are not included in an indirect cost pool.

4. Cost Allocation Plans

Cost allocation plans used to spread central administrative costs across local agency programs must be in accordance with the OMB circulars.

5. Indirect Rates

a. Local agencies may apply a federally approved indirect cost rate to charge administrative costs only if both of the following conditions are met:

(1) The agency has an approved indirect cost agreement with a cognizant federal agency.

(2) The indirect cost agreement precludes the application of the indirect rate to direct client benefits in this program.

b. The application of indirect cost charges may not result in exceeding applicable contract budget limits.

B Procedure

1. Each local agency must ensure their cost allocation plans are in accordance with the OMB circulars.

2. Each local agency must submit a copy of its cost allocation plan to Commerce with its General Weatherization Work Plan. Subsequent to the initial submittal, agencies are required to resubmit copies of their cost allocation plans with the next General Weatherization Work plan only after changes have been made in the cost allocation plan. See **Section 8.2, *General Weatherization Work Plan***.

3. Local agency files must include the following documentation:

   a. All applicable administrative costs.

   b. Auditor approval of cost allocation plan.

   c. Indirect cost agreement approval letter.

SECTION 6.4 PROGRAM OPERATION COSTS

A. Policy

1. Program operation costs are costs that can be clearly identifiable with a program and are comprised of Weatherization Measures, Health and Safety Measures, Weatherization-Related Repair Measures, Program Support, Vehicle and Equipment, and Other Program Operations (See **Exhibit 6.1, *Weatherization Program Fiscal Definitions***)..

   a. **Weatherization, Health and Safety, and Weatherization-Related Repair Installed Measure Costs** – Examples include:

      (1) Securing building permits when necessary for the installation of weatherization measures.

      (2) Approved renewable energy systems (DOE funds only). See **Section 5.7, *Renewable Energy Systems***

      (3) Material Costs

         (a) Material costs charged by a subcontractor.

         (b) Purchase and delivery of materials. See **Section 6.4.1, *Compliance with Federal Rules for Use of Recycled Insulation Materials***, for procurement guidance for recycled insulation materials.

         (c) Storage or warehousing of weatherization materials.

         (d) Payment of staff involved in purchasing, inventory, and distribution of weatherization materials.

         (e) Payment for labor involved in fabricating materials.

      (4) Labor Costs

         (a) Labor costs charged by a subcontractor.

         (b) Local agency weatherization crew costs (salary and benefits).

(c) Supervisory on-site labor such as crew chiefs.

b. **Program Support Costs -** Examples include:

(1) Weatherization audit and inspection.

(2) Consumer Conservation Education.

(3) Direct supervision of program services and other direct program management/oversight responsibilities.

(4) Intake and outreach staff.

(5) Printing.

(6) Office space and utilities.

(7) Telephone calls.

(8) Copying.

(9) Postage.

(10) Equipment, vehicle, and tool maintenance—including computer and other electronic equipment and software used by weatherization program activities.

(11) Lease or rental of tools, equipment, and vehicles.

(12) Low-Cost/No-Cost Weatherization Activities

(a) Low-cost/no-cost services may be provided to an eligible household even when other measures are not provided.

I. Up to ten percent of a local agency's allocation may be used to perform low-cost/no-cost weatherization in eligible dwelling units.

II. Low-cost/no-cost measures include installation of water-flow controllers, furnace or cooling filters, or items that are primarily directed toward

reducing air infiltration (weather-stripping, caulking, and glass patching, etc.).

(b) Units that receive only low-cost/no-cost services may not be counted as completed units in the Weatherization Information Data System (WIDS).

(c) DOE-Specific Limits and Exclusions

I. Under DOE, low-cost/no-cost materials are limited to $50 per dwelling unit. There is no per dwelling unit limit for HHS, BPA and MM.

II. No DOE funds may be used to install low-cost/no-cost materials.

III. Low-cost/no-cost weatherization measures are excluded from the following requirements:

i. One DOE weatherization activity per dwelling unit restriction.

ii. DOE average cost per unit expenditure.

c. **Vehicle and Equipment Costs**- Examples include:

(1) Purchase of vehicles.

(2) Equipment and tool purchase—including computer and other electronic equipment and software used by weatherization program

d. **Other Program Operations Costs -** Examples include:

(1) Financial Audit

(2) Liability Insurance

(a) Program-related liability insurance—including POI insurance.

(b) Payments for liability insurance covering personal injury and property damage for on-site work.

(c) Liability insurance for onsite work.

(3) Leveraging expenses used to increase the amount of weatherization assistance from non-Federal sources, including private sources such as utilities.

2. Combined Funds

a. When non-Commerce funds (such as utility funds) are combined with Commerce funds on a weatherization project, Commerce's share will be the minimum amount necessary to complete the weatherization work after funds from the other sources are used.

b. Commerce funds for weatherization must not be used to supplant other funds or programs.

3. Building Cost and Unit Cost Calculations

a. For each Weatherization project, Building Costs are calculated for any given time period and funding source(s) and are the sum of the following:

(1) Installed Measure Costs (IMC) from WIDS

(a) Weatherization Measures (Wx)

(b) Weatherization-Related Repair Measures (WRR)

(2) Program Support Costs from the monthly Requests for Reimbursement. The Program Support costs are allocated in a reasonable and consistent manner in accordance with OMB circulars.

b. Single Family Projects are one unit per building. The Unit Cost (cost per unit) is the same as Building Cost.

c. Multi-Family Projects are multiple units per building. To determine Unit Cost for each building, divide the total calculated Building Cost by the total number of units entered in WIDS.

d. Program Support costs calculated on a Monthly and Quarterly basis for use in assessing agency performance will be considered to be temporary only.

Reference in: 10 CFR 440.18
10 CFR 440.19
10 CFR 440.20
10 CFR 440.24
WPN 08-1, 2007
WPN 07-1, 2006
WPN 06-1, 2005
WPN 02-1, 2001
WPN 00-1, 1999
Commerce General Terms and Conditions
DOE Special Terms and Conditions
HHS Special Terms and Conditions
MM Special Terms and Conditions

e. The final total Building and Unit Costs will be determined for each funding source at contract closeout.

f. The following costs are NOT included in Building Cost (Unit Cost):

(1) Administration

(2) Health and Safety Measures Costs

(3) Other Program Operations Costs

(a) Financial Audits

(b) Liability Insurance

(c) Leveraging Costs

(4) Training and Technical Assistance Costs

(5) Special Project Costs

4. State and Local Taxes

a. Charge applicable state and local taxes on purchases to the same budget category and funding source as the purchased item or service.

b. Local agencies making weatherization improvements under the weatherization program for low-income homeowners or renters are eligible for exemption from state sales tax and use tax. See Washington State Department of Revenue Special Notice: *Sales and Use Tax Exemption for the Weatherization Assistance Program*. Purchases of qualified materials must be accompanied by a *Buyers' Retail Sales Tax Exemption Certificate.*

B. Procedure

1. Local agencies must organize all bookkeeping and production records systems to account for the different cost allowances and budget categories of the various funding sources involved.

2. Local agencies must report program expenditures to Commerce as required.

3. See sections **5.3, *Health and Safety Measures and Repairs***, and **5.4, *Weatherization-Related Repair***.

4. See **Chapter 5, *Providing Weatherization Services***, for allowable weatherization measures and fund source limitations & allowances.

SECTION 6.4.1 COMPLIANCE WITH FEDERAL RULES FOR USE OF RECYCLED INSULATION MATERIALS

A. Policy

1. Commerce and local agencies must comply with Environmental Protection Agency (EPA) regulations regarding the use of recycled materials (40 CFR 247.12, Comprehensive Procurement Guideline for Products Containing Recovered Materials (**www.epa.gov/**).

   a. Local agencies are required to make good faith efforts to procure insulation products that contain recycled materials.

   b. Exceptions to this policy may be made only if the following conditions can be documented:

      (1) Inability of the product to perform its intended purpose.

      (2) Unavailability of the product at a reasonable price.

      (3) Inability to obtain the product within a reasonable period of time.

      (4) Inadequate number of vendors for obtaining and verifying estimates of recovered materials content to insure a satisfactory level of competition at the time of procurement.

2. In addition to meeting procurement specifications, local agencies must establish an affirmative procurement program consisting of four items.

   a. Preference program for purchasing designated items.

      (1) EPA regulations provide three general approaches:

         (a) Minimum content standards that identify the minimum content of recovered materials that an insulation product must contain.

         (b) Case-by-case procurement, allowing competition between insulation products made of new materials and those with recovered materials.

         (c) An alternative approach that accomplishes the same objectives as a) and b).

      (2) EPA regulations recommend that the procuring agency use minimum content amount for commercially available insulation products that may contain recovered materials. These include:

         (a) Cellulose, loose fill, and spray-on (75 percent post-consumer recovered paper by weight).

Referenced in: 10 CFR 600.116
40 CFR 247.12
DOE Guidance Memorandum CE-232, 1990
WPN 06-1, 2005

(b) Perlite composite board (23 percent post-consumer recovered paper by weight).

(c) Rock wool (50 percent recovered materials).

b. Promotion program.

c. Procedures for obtaining estimates and certifications of recovered materials content and for verifying the estimates and certifications.

d. Annual review and monitoring of the effectiveness of the program.

3. Further guidance is provided in the ***Specifications for the Low-Income Weatherization Program*** on Commerce's Weatherization Documents Web page.

B. Procedure

1. Local agencies must allow Commerce access to all affirmative procurement program documentation upon request.

2. Local agency files must contain the following documentation:

   a. Procurement conditions that prohibit compliance with 40 CFR 247.12.

   b. Verification the agency is in compliance with EPA's affirmative procurement program.

3. See ***Specifications for the Low-Income Weatherization Program*** on Commerce's Weatherization Documents Web page.

SECTION 6.5 TRAINING AND TECHNICAL ASSISTANCE

A. Policy

1. Expenditure of contract funds awarded specifically for training and technical assistance (T&TA) purposes are subject to the following conditions:

   a. Training must have direct application and benefit to local agency weatherization programs and assigned staff.

      If the training is not strictly for the benefit of the weatherization program staff, local agencies must document how other programs will share the training costs.

   b. Priority is to be given to direct training opportunities for staff, crews, and subcontractors.

   c. Staff salaries while attending training, providing training, traveling to and from training, and participating in on-the-job training is an allowable expense. Equipment and materials related to training may also be purchased with these funds, with appropriate written justification and prior approval from Commerce.

   d. T&TA funds cannot be used for:

      (1) Salaries not related to training activities;

      (2) Vehicle or equipment purchases; or

      (3) Program costs.

2. Local agencies must complete the ***Training and Technical Assistance Expense Form* (Exhibit 6.5A)**.

   a. Local agencies must include all names and titles of individuals attending training.

   b. Local agencies must keep Training and Technical Assistance Expense Forms on file for review by Commerce field representatives.

3. Commerce may occasionally reimburse local agency costs for providing, or travel to receive, training and technical assistance through the Peer Exchange Program.

   a. Prior Commerce approval is required for this reimbursement.

   b. Local agencies must submit a ***Peer Exchange Proposal Form* (Exhibit 6.5B)** directly to the attention of assigned Commerce field representative.

B. Procedure

Local agency files must include the following documentation:

1. Cost-sharing plan if training is not strictly for the benefit of weatherization program staff.
2. ***Training and Technical Assistance Expense Form (Exhibit 6.5A)***.
3. ***Peer Exchange Proposal Form* (Exhibit 6.5B)**.

SECTION 6.6 EQUIPMENT

A. Policy

1. Equipment/Vehicle Purchases

   a. All purchases of equipment/vehicles purchased with Wx Program funds and which have a unit cost of $5,000 or greater require Commerce written approval.

   b. Local agencies must submit an Equipment/Vehicle Purchase Request/Approval Form (Exhibit 6.6A).

      (1) Required - Three quotes from different vendors.

      (2) Required - statement that low bid will be selected or sufficient justification of "best value selection," if low bid is not recommended for awarding agency approval.

   c. The grantee's procurement system should include at the least the following:

      (1) A code or standard of conduct that shall govern the performance of its officers, employees, or agents engaged in the awarding of Grants using federal funds.

      (2) Procedures that ensure all procurement transactions shall be conducted in a manner to provide, to the maximum extent practical, open and free competition.

   d. Minimum procedural requirements as follows:

      (1) Follow a procedure to assure the avoidance of purchasing unnecessary or duplicative items.

      (2) Solicitations shall be based upon a clear and accurate description of the technical requirements of the procured items.

      (3) Positive efforts shall be made to use small and minority-owned businesses.

      (4) Some form of price or cost analysis should be performed in connection with every procurement action.

   e. Equipment and vehicles should be acquired with grant funds from Commerce only after all other options have been explored.

   f. Lease versus purchase should be evaluated carefully on all equipment and vehicles.

g. If equipment is shared with other local agency programs, a rental fee is required and may be implemented based on a proportionate use of the equipment.

h. Insurance – Local agencies shall provide insurance liability coverage for equipment at a minimum of $1,000,000 liability coverage per occurrence.

i. DOE Allowance

(1) 10 CFR 440.18 States: For the purposes of determining the average cost per dwelling limitation, costs for the purchase of vehicles or other certain types of equipment as defined in 10 CFR part 600 are encouraged and should be amortized over the useful life of the vehicle or equipment.

(2) Requests for equipment/vehicles purchased with DOE funding require prior written DOE approval. Allow 90 days for DOE review.

(3) Trade-in of previously acquired equipment of $5,000 or more is allowed with DOE approval; see Section 8.12.1A Disposal of Equipment.

(4) DOE would not need to approve a vehicle lease that does not include a "purchase option." If a lease-purchase option is proposed, regardless of the purchase price, DOE would need to approve the purchase of the vehicle.

(5) Whenever equipment/vehicle purchased with DOE funding is shared with a non-Federal outside organization, a fee must charged no less than private sector rates.

2. Securing Commerce's Interest in Motor Vehicles, Equipment, and Fixtures

Local agencies are responsible for ensuring Commerce's financial vested interest in motor vehicles, equipment and fixtures with purchase values of $5,000 or more, purchased under Commerce contracts. This shall include insurance coverage in the amount of $1,000,000 minimum liability per occurrence.

a. Motor Vehicles: Certificates of Title. Local agencies will name Commerce as legal owner/lien holder on Certificates of Title for motor vehicles. See RCW 46.12.095, Requirements for perfecting security interest. (See Procedure)

b. Equipment: UCC (1) filings. Visit Washington State Department of Licensing's Website (http://www.dol.wa.gov/) to download appropriate forms. Visit Special Terms and Conditions of agency Weatherization Program Grant Contract with Commerce under Treatment of Assets. (See Procedure)

c. Fixtures: UCC (2) filings. Filing will be done at the County Auditor's Office in which the property is located. Visit Special Terms and Conditions of agency Weatherization Program Grant Contract with Commerce under Treatment of Assets. (See Procedure)

B. Procedure

1. Local agency will submit request for approval (Equipment/Vehicle purchase request/approval form – Exhibit 6.6A) for purchase of equipment/vehicle to Commerce's assigned staff employee.

   a. Fill out Equipment/Vehicle purchase request/approval form – Exhibit 6.6A, completely, (front, back, date and sign).

   b. Send Form – Exhibit 6.6A to Commerce's assigned staff employee.

   c. Submit Form – Exhibit 6.6A with required 3 bids/quotes attached.

2. Upon Commerce's approval of Local Agency's Equipment/Vehicle purchase request/approval form, Local Agency may proceed with procurement process that conforms to Agency, State, and Federal procurement guidelines.

3. Procurement records and files must include the following documentation:

   a. Selection or rejection.

   b. The basis for the cost or price.

   c. Justification for lack of competitive bids if offers are not obtained.

   d. DOE approval for any trade-in of previously acquired equipment of $5,000 or more; when making a replacement purchase.

   e. Approved form. See **Exhibit 6.6A** Equipment Purchase Request/Approval Forms

   f. DOE approval for equipment/vehicles purchased with DOE funds.

4. Securing Commerce's Interest: Motor Vehicles - Original Certificate of Title for motor vehicles. See RCW 46.12.095, Requirements for perfecting security interest (http://apps.leg.wa.gov/rcw/) for information regarding Certificates of Title for motor vehicles.

a. Local agencies will name Commerce as legal owner/lien holder on Certificates of Title for motor vehicles. See RCW 46.12.095, Requirements for perfecting security interest (http://apps.leg.wa.gov/rcw/).

b. Local agencies will forward original Certificate of Title for vehicles to Commerce with the expenditure report on which they are claimed.

5. Securing Commerce's Interest: Equipment - UCC filings. Check Washington State Department of Licensing's Website (http://www.dol.wa.gov/) to download appropriate forms. Visit Special Terms and Conditions of agency Weatherization Program Grant with Commerce under Treatment of Assets.

   a. Every five years local agencies will complete and submit to Commerce for approval, signed Uniform Commercial Code Financing Statements (Form UCC1), listing equipment other than motor vehicles and other than fixtures listed below, with acquisition costs of $5,000 or more and purchased under Commerce contracts. Go to (http://apps.leg.wa.gov/rcw/); see RCW 62A.9A, Secured transactions, sales of accounts, contract rights and chattel paper – Part 5, Filing.

   b. Commerce will be named as Secured Party.

   c. UCC1 statements will include the phrase: "all presently owned and after-acquired inventory and equipment."

   d. Commerce will determine which items it wishes to continue its secured interest in from previous filings.

   e. If approved, Commerce will sign the completed statements and file them with the Department of Licensing, UCC Division, Olympia, WA 98504.

   f. Commerce and local agencies will keep copies of all UCC filings.

6. Securing Commerce's Interest: Fixtures - UCC (2) filings. Filing will be done at the County Auditor's Office in which the property is located. Visit Special Terms and Conditions of agency Weatherization Program Grant with Commerce under Treatment of Assets.

   a. Local agencies will complete and submit to Commerce for approval signed Uniform Commercial Code (UCC2) Forms for fixtures (assets attached to realty) with acquisition costs of $5,000 or more and purchased under Commerce contracts. Go to (http://apps.leg.wa.gov/rcw/); see RCW 62A.9A, Secured transactions, sales of accounts, contract rights and chattel paper – Part 5, Filing.

b. UCC2 Forms may be obtained at the local county Auditor's Office.

c. Commerce will be named as Secured Party.

d. If approved, Commerce will sign the completed statements and file them with the local county Auditor's Office in the county where the real estate is located.

e. Commerce and local agencies will keep copies of all UCC filings.

SECTION 6.7 BUDGET REVISIONS

A. Policy

1. Contract and contract amendment face sheets include approved budgets for local agencies.

2. Local agencies may cumulatively transfer up to and including five percent (5%) of the sum of all program line items among approved budget line items. Allowable transfers include:

   a. Administrative funds may be transferred to Program Operations.

   b. Program Operations is broken down into the following categories. Local agencies may transfer funds between these categories based on certain parameters.

      (1) Program

      (2) Health and Safety

      (3) Weatherization-Related Repair

      (4) DOE only: Liability Insurance and Financial Audit

   c. Training and Technical Assistance funds may not be transferred among line items.

3. Budget revisions in excess of five percent must be submitted in writing (email acceptable) to, and approved by, Commerce before local agencies submit expenditure reports reflecting the revisions.

   a. Local agencies must provide the original budgets and proposed changes to the appropriate weatherization program manager.

   b. Program managers will give approval via email, copying Commerce's program budget specialist.

4. No contracts shall be amended to adjust budgets, the scope of work, or to change other contract provisions after the termination of the contract.

B. Procedure

1. Local agencies must submit a written request (email acceptable) to Commerce for budget revisions in excess of five percent of the sum of all program line items.

2. Local agencies must retain records of all Commerce approved budget adjustments.

Referenced in: 10 CFR 600.125
Commerce General Terms and Conditions
DOE Special Terms and Conditions
MM Special Terms and Conditions

SECTION 6.8 AUDITS

A. Policy

1. All program funds made available to Commerce local agencies will be audited annually in accordance with the following:

   a. Generally accepted accounting principles.

   b. Governmental Auditing Standards ("The Yellow Book") issued by the General Accounting Office (GAO).

   c. The Office of Management and Budget (OMB) Compliance Supplement for Single Audits of State and Local Governments.

   d. OMB Circular A-133, Audits of States, Local Governments, and Non-Profit Organizations.

   e. DOE 10 CFR 600, Financial Assistance Rules.

   f. All state and federal laws and regulations governing the programs in which local agencies participate.

2. Costs of audits will be incorporated into Commerce's contracts, charged to the local agency's Administration category of expenditure.

   If local agencies meet the threshold contained in OMB Circular A-133, DOE allows the costs of financial audits to come off the top of the contract.

3. Local agency auditing will be conducted by any of the following entities:

   a. Office of State Auditor.

   b. A single independent Certified Public Accountant (CPA) firm selected by Commerce.

   c. CPA firms selected by the local agency at Commerce's discretion.

4. All auditors employed must provide positive assurance to local agencies that they meet independent CPA provisions defined in the Yellow Book, including annual training.

Referenced in: 10 CFR 440.2
10 CFR 440.23
10 CFR 600
WPN 06-1, 2005
OMB Circular A-133
Commerce General Terms and Conditions
DOE Special Terms and Conditions
HHS Special Terms and Conditions
MM Special Terms and Conditions

B. Procedure

Local agencies must allow Commerce access to all audit reports upon request, and if applicable, audit-finding action plans.

CHAPTER 7 QUALITY ASSURANCE

SECTION 7.1 LOCAL AGENCY INSPECTION OF WEATHERIZATION WORK

A. Policy

1. Local agencies shall define written internal monitoring procedures to perform regularly as a means for quality control, compliance assurance, and risk assessment. Such procedures must include written inspection procedures that ensure comprehensive and consistent inspections of all units weatherized.

2. No dwelling will be reported to Commerce as completed until the local agency has performed a final inspection and certified that appropriate work has been completed in a quality manner.

3. Local agencies shall validate and document subcontractor's work performed prior to paying them, by confirming work is complete, verifying work is appropriate and allowable, and certifying work is performed in compliance with the Wx Specifications and in a quality manner. Measures installed in the field require a final or an in-progress inspection

4. Inspections shall take place within 30 days of completion of work on the residence.

5. A trained and qualified inspector, someone other than the auditor of the installer(s), shall conduct inspections.

   Exception: Local Agencies that are unable to meet this requirement shall self-identify in writing to Commerce, by July 1, 2014. Commerce and the Wx Network will work together to develop an acceptable alternative(s).

   a. Must be certified as a Home Energy Professional Quality Control Inspector (QCI).

      Exception: Until April 1, 2015, a certification as a building analyst by the Building Performance Institute (BPI) meets this requirement.

   b. The Peer Circuit Rider/Building Performance Center will provide training and testing.

   c. Newly hired inspectors must have work reviewed by a certified QCI (or certified Building Analyst 1 (BA1), before April 1, 2015) until such time that they become certified.

B. Procedure

Client files must include signed and dated documentation of all inspections and final certification.

SECTION 7.2 COMMERCE PROGRAM MONITORING

A. Policy

1. Commerce conducts annual program monitoring in accordance with the Protocols section of the ***Weatherization Monitoring Manual***.

2. Local agencies will provide Commerce field representatives with all requested information and assistance in a professional, cooperative manner and by date requested.

   a. Local agencies will complete and submit to Commerce an annual General Weatherization Work Plan and monitoring questionnaire.

   b. Questions may be addressed to the local agency during desk review prior to the monitoring visit. The local agency will respond to all Commerce questions in a timely fashion.

   c. Local agencies are expected to ensure that necessary diagnostic equipment and appropriate employees are available throughout the duration of the Commerce site visit, including employees who may have flexible work schedules.

   d. Requests to change a monitoring visit must be received in writing 30 days prior to scheduled visit (emergencies excluded).

   e. Executive directors are strongly encouraged to participate in monitoring exit conferences.

   f. Local agencies will make corrections to work quality issues within 30 days of receipt of the monitoring report and submit a written response to Commerce.

   g. An immediate (24 hour) correction notice may be issued to a local agency for serious Health and Safety violations found during site inspections.

B. Procedure

See the ***Weatherization Monitoring Manual*** on Commerce's Weatherization Documents Web page.

POLICY 7.3 ASSESSING LOCAL AGENCY RISK

This policy applies to Local Agencies (LA), which administer the Weatherization (Wx) Program and use Commerce administered funds.

1. HIP completes annual risk assessments for each Local Agency (LA).

    a. LAs scheduled to receive a fiscal monitoring within the annual assessment period will submit the Commerce "Community Action Program Administrative Risk Assessment."

    b. The remaining LAs will annually submit the Commerce "Risk Assessment Form for Local Governments/Non-Profits/Tribes."

2. The risk assessment has two equally weighted parts, the LA organizational level risk and Wx Program Performance Measures (POLICY 7.4).

3. The organizational and program risk assessments combine to provide a total risk assessment designated as high, medium, or low.

4. Commerce will increase the monitoring level and frequency for high risk Local Agencies.

POLICY 7.4 MEASURING PERFORMANCE

This policy applies to Local Agencies (LA), which administer the Weatherization (Wx) Program and use Commerce administered funds.

1. Commerce measures Wx program performance annually for each Local Agency.

    a. The Wx Program Performance Measures (PM) system objectively measures Local Agency (LA) performance. The PM system clearly defines expectations, establishes benchmarks, and sets expectations. The PM system increases accountability by tracking, assessing, and scoring LA performance in the following areas: Program, Fiscal, and Technical.

2. Commerce scores Local Agency performance in Program, Fiscal, and Technical.

3. A LA acquires PM points when performance does not meet PM benchmarks, deadlines, or expectations.

POLICY 7.4.1 MEASURING WX PROGRAM PERFORMANCE

This policy applies to Local Agencies (LA), which administer the Weatherization (Wx) Program and use Commerce administered funds.

1. Commerce scores each Local Agency's (LA) Program performance.

2. Program Performance Measure (PM) includes:

   a. LA submits and enters accurate required reports and responses by the due date, as follows:

      (1) Submits Request for Reimbursement (19-1A) for each Commerce-administered fund source on or before the 15th every month.

      (2) Submits Grant Closeout on or before 45 days after close of grant period.

      (3) Enters "Completed" Weatherization projects into the Weatherization Information Data System (WIDS) on or before the 15th of the month following project's final inspection approval.

      (4) Enters Monitoring Questionnaire response into WIDS on or before 30 days after the date of the "Monitoring Visit Announcement Letter."

      (5) Submits Monitoring/Inspection response on or before 30 days after the Monitoring or Inspection Report date.

3. If LA cannot meet above due date(s), LA meets negotiated due date.

4. LA negotiates any needed deadline revisions with Commerce prior to the due date.

POLICY 7.4.2 MEASURING WX FISCAL PERFORMANCE

This policy applies to Local Agencies (LA), which administer the Weatherization (Wx) Program and use Commerce administered funds.

1. Commerce scores each Local Agency's (LA) Fiscal performance.

2. Fiscal Performance Measure (PM) includes:

   a. Expend funds according to each Wx Fund Source Grant Expenditure Benchmarks. See **Exhibit 7.4.2, *Grant Expenditure Benchmarks***.

      (1) The Grant Expenditure Benchmarks are set forth in the Wx Manual Policy[1].

      (2) Funds are considered expended when submitted on the Request for Reimbursement (19-1A).

      (3) For the first assessment period July 1, 2013 – June 30, 2014 (and the two years prior), only 100% spend out benchmark at end of contract will be used to establish PM Fiscal baseline score.

3. If LA cannot meet established benchmark due date(s), LA meets negotiated due date.

4. LA negotiates any needed deadline revisions with Commerce prior to the due date.

[1] The Grant Expenditure Benchmarks are not contractural obligations.

POLICY 7.4.3 MEASURING WX TECHNICAL PERFORMANCE

This policy applies to Local Agencies (LA), which administer the Weatherization (Wx) Program and use Commerce administered funds.

1. Commerce scores each Local Agency's (LA) Technical performance.
2. Technical Performance Measure (PM) includes:
   a. Perform Quality Control to assure quality fieldwork and documentation.
   b. The expectation is no discrepancies, corrections, or findings.
3. Commerce calculates the Correction Factor as the percentage of measures failed compared to the total measures installed.

CHAPTER 8 PROGRAM MANAGEMENT, ADMINISTRATION, AND REPORTING

SECTION 8.1 SOLICITING PROVIDERS FOR WEATHERIZATION PROGRAM SERVICES

A. Policy

1. Primary service delivery is provided by community-based, nonprofit, and local government agencies. Commerce defines the above entities as local agencies.

   Commerce gives special consideration in designating local public or nonprofit agencies that received funds for energy related assistance programs under the 1964 Economic Opportunity Act.

2. Local agencies must have demonstrated, and continue to demonstrate, fiscal accountability and program effectiveness.

   If, in a particular geographic area, a program or local agency has been terminated, or failed to meet Commerce's requirements in the previous program year, a successor agency that operates in substantially the same manner will be considered.

SECTION 8.2 GENERAL WEATHERIZATION WORK PLAN

A. Policy

1. Local agencies will submit to Commerce an annual ***General Weatherization Work Plan*** according to instructions and deadlines established by Commerce.

   a. Local agencies must submit an electronic copy and a hard copy with original signatures.

   b. To access the current plan, visit the ***Weatherization Program Documents*** page on the Commerce website.

2. Local agencies will use the following fund source program years when completing the annual plan:

   a. DOE - July 1 through June 30.

   b. HHS - January 1 through December 30.

   c. BPA – October 1 through September 30.

   d. MM - Biennium is July 1 of the first year through June 30 of the second year. Local agencies will use data for one year, not both, when completing the plan.

B. Procedure

1. Local agency files must include a copy of the current completed General Weatherization Work Plan.

2. See Weatherization Program Documents page on the Commerce website, to view the current year's plan.

SECTION 8.3 CONTRACTS AND AMENDMENTS

A. Policy

1. Commerce contracts to local agencies prior to the start of the program year. See **Exhibit 8.3A, *Sample Weatherization Contract Face Sheet***.

   a. The contract is comprised of the following:

      (1) Contract face sheet.

      (2) Pertinent exhibits (See **Exhibit 8.3B, *Sample Exhibit A***).

      (3) By reference, the ***General Weatherization Work Plan***.

      (4) Commerce *General and Special Terms and Conditions.*

   b. Fund source program years are as follows:

      (1) DOE - July 1 through June 30.

      (2) HHS - January 1 through December 30.

      (3) BPA – October 1 through September 30.

      (4) EM - Biennium is July 1 of the first year through June 30 of the second year.

   c. The contract face sheet specifies the amount of funds to be allocated to each budget category.

   d. The contract cites all applicable federal and state laws and regulations, as well as Commerce policies that govern local agency performance.

2. Commerce or the local agency may initiate amendments during the course of the contract period to change expenditures or production by mutual agreement. See **Exhibit 8.3C, *Sample Weatherization Contract Amendment Face Sheet*.**

   a. When additional funds are available after a contract is made between Commerce and the local agency, Commerce may increase the contract amount through a standard amendment.

      (1) A standard amendment requires revision to the original contract face sheet and authorized signatures from Commerce and the local agency.

      (2) Local agencies will submit a ***Signature Authority form* (Exhibit 8.3D)** annually with the General Weatherization Work Plan and update as needed.

b. No amendments may be made after the close of the contract period.

3. Local agencies will submit contracts and amendments according to instructions and deadlines established by Commerce.

B. Procedure

1. Local agency files must include the following documentation:

   a. Weatherization contract face sheets for each fund source. See **Exhibit 8.3A, *Sample Weatherization Contract Face Sheet***.

   b. Weatherization contract amendment face sheets for each fund source, as applicable. See **Exhibit 8.3C, *Sample Weatherization Contract Amendment Fact Sheet***.

   c. Signed signature authority forms. See **Exhibit 8.3D, *Signature Authority***.

2. See **Exhibit 8.3B, *Sample Exhibit A***.

3. See *General Weatherization Work Plan Form* on the Weatherization Documents page, to view the current year's plan.

4. See *Commerce General Terms and Conditions*.

SECTION 8.3.1 SPENDING LIMITS

A. Policy

1. Commerce may impose spending limits on contracts, restricting the amount of money a local agency may spend, regardless of the total amount of the contract.

   For example, spending limits may be used to limit expenditures until the local agency meets certain conditions or Commerce receives full program funding.

2. Within the limit set by Commerce, administrative expenditures cannot exceed a percent of the spending limit that is higher than the percent of the administrative funds in the contract award.

   For example, if the contract provides seven percent of the total award for administration, up to seven percent of the spending limit may be spent for administrative costs.

3. Commerce will only reimburse local agencies up to the amount of the spending limit until the local agency receives email or written notification from Commerce that the spending limit is lifted.

B. Procedure

Local agency files must include a hard copy of Commerce notification.

SECTION 8.4 SUBCONTRACTING

A. Policy

1. Local agencies may subcontract labor and installation services in accordance with procurement standards described in Commerce's *General Terms and Conditions,* and subject to Commerce's approval of plans provided in the local agency's General Weatherization Work Plan. See **Section 8.2, *General Weatherization Work Plan***.

    a. When contracting with installers, manufacturers, or suppliers, local agencies shall follow standard business practices for selecting the best weatherization material or installation for the best price.

    b. Local agencies are responsible for ensuring that subcontractors are familiar with program measures, installation specifications, and current techniques and methodologies.

2. Local agencies must certify annually that neither the organization nor its principals are presently debarred, suspended, proposed for debarment, declared ineligible, or voluntarily excluded from participation in a weatherization contract with Commerce by any federal department or agency as part of the General Weatherization Work Plan. See **Exhibit 8.4A, *Certification Regarding Debarment, Suspension, or Ineligibility and Voluntary Exclusion – Primary Tier Covered Transactions***.

    a. Local agencies are prohibited to enter into contracts with parties that are suspended or debarred, or whose principals are suspended or debarred.

    b. Covered transactions include procurement contracts for goods and services equal to or in excess of $100,000 or more.

3. Commerce reserves the right to review and approve the selection process and the contract form used by local agencies.

Referenced in: 10 CFR 600.236
10 CFR 600 Part 1036
WPN 02-1, 2001
OMB Circular A-102
OMB Circular A-110
OMB Circular A-133
Commerce General Terms and Conditions

B. Procedure

1. Local agency files must include the following documentation:

   a. All contracts entered into with subcontractors.

   b. ***Certification Regarding Debarment, Suspension, or Ineligibility and Voluntary Exclusion – Primary Tier Covered Transactions* (Exhibit 8.4A)**. The current form is located in the General Weatherization Work Plan on the ***Weatherization Documents*** page.

2. See *Commerce General Terms and Conditions*.

3. See **Section 8.2, *General Weatherization Work Plan***.

SECTION 8.4.1 WARRANTIES and OWNER RELEASE

A. Policy

1. Local agency subcontractors must provide a one-year warranty against defects in materials, manufacture, design, or installation of work performed under contract.

    a. Local agencies and their subcontractors must provide homeowners with the original warranty paperwork for materials and appliances installed or provided.

    b. Local agencies must confirm homeowner receipt of all warranty information.

2. Local agencies must receive owner authorization to install measures on a dwelling unit. **Exhibit 8.4.1A, *Property Owner Release Form***, is an example of acceptable documentation.

B. Procedure

1. Client files must include the following documentation:

    a. Confirmation of homeowner receipt of warranty information.

    b. Scope of Work.

    c. **Exhibit 8.4.1A, *Property Owner Release Form***, or equivalent documentation.

SECTION 8.5 CERTIFICATION REGARDING LOBBYING

A. Policy

Local agencies that receive $100,000 or more in federal funds, in one or more awards during the fiscal year, must file a Federal Certification Regarding Lobbying annually as part of the General Weatherization Work Plan. See **Exhibit 8.5A, *Federal Certification Regarding Lobbying***.

1. The same requirements apply to all levels of subcontract, sub grant, and contracts under grants, loans, and cooperative agreements.

2. Local agencies must certify that they will not use federal funds to lobby for support of federally funded programs.

3. If any funds other than federal are used for lobbying at the federal level, as defined in the certification, such activity must be reported on the **Standard Form LLL, *Disclosure of Lobbying Activities***.

B. Procedure

Local agency files must include the following documentation:

1. Copies of all certifications and disclosures signed by the local agency and submitted to Commerce. See **Exhibit 8.5A, *Federal Certification Regarding Lobbying***, or access the form located in the current General Weatherization Work Plan on the ***Weatherization Documents*** page.

2. Copies of all certifications and disclosures signed by subcontractors and submitted to the local agency. See **Exhibit 8.5A, *Federal Certification Regarding Lobbying***, or access the form located in the current General Weatherization Work Plan.

3. Copies of Standard Form LLL, *Disclosure of Lobbying Activities*, as applicable. The form is available as an exhibit and may also be found at **http://www.whitehouse.gov/omb/grants/sflllin.pdf**.

SECTION 8.6 ISSUANCE OF WORKING CAPITAL ADVANCES

A. Policy

1. A local agency may request an initial working capital advance one month prior to planned expenditures using the "Advance Request" space of the applicable weatherization program request for reimbursement form. See **Exhibit 8.7A, *Sample Weatherization Program Request for Reimbursement*.**

   a. Requests for an advance may not exceed the local agency's planned expenditures for the first sixty days' Administration/Program or 10 percent of the total Administration/Program.

   b. Commerce will issue the advance once both parties sign the weatherization program contract and the local agency submits the request for advance.

   c. The working capital advance must be liquidated within sixty days of issue.

   d. Examples:

      (1) If a local agency has a $10,000 advance and sends in a request for reimbursement showing $8,000 in expenditures and estimates that its expenditures for the next month will be close to $10,000, then the local agency should enter $8,000 in the "Advance Request" space on its request for reimbursement. Commerce will apply the $8,000 the local agency spent towards liquidation of its original advance to show that those funds were expended first. Commerce will issue a new advance for $8,000 leaving the local agency with the $2,000 remaining from the initial advance and new advance of $8,000 for a total of $10,000. See **Exhibit 8.6A, *Working Capital Advance Example One*.**

      (2) If a local agency has a $10,000 advance and sends in a request for reimbursement with $12,000 of expenditures but wants to maintain only a $10,000 advance, the local agency should enter $10,000 in the "Advance Request" space. See **Exhibit 8.6B, *Working Capital Advance Example Two***.

      (3) If a local agency has a $10,000 advance and sends in a request for reimbursement for $10,000 but knows it will only need $5,000 for the next month, the local agency should request an advance of $5,000. See **Exhibit 8.6C, *Working Capital Advance Example Three***.

      (4) If a local agency has a $10,000 advance and sends in a request for reimbursement for $2,000 and requests an advance of $2,000, Commerce will issue it. However, if the local agency only spends another $2,000 the following month and it requests additional funds, the advance will not be approved and the expenditures will be applied against the $10,000 advance. Future requests for reimbursement will also be applied against the advance until local agency

expenditures increase or the advance is completely liquidated. See **Exhibit 8.6D, *Working Capital Advance Example Four***.

2. When Commerce receives a request for reimbursement after the advance is issued, the requested reimbursement will be deducted from the advance.

3. When an advance is reduced and performance verifies need, the local agency may submit a request for an additional advance on any month's request for reimbursement to bring them up to the sixty days of Administration/Program or ten percent of the total Administration/Program.

4. After sixty days, if the local agency has over-projected its advance needs or has more than ten percent cash on hand, Commerce may request that the excess amount be returned by a check accompanying that month's request for reimbursement.

   When cash advance needs have been over-projected and are reconciled, the local agency may request an additional advance for sixty days of Administration/Program or ten percent of the total Administration/Program. Commerce may, however, adjust the advance request based on the previous sixty days expenditures.

5. Written justification and prior approval is required for advance payments exceeding 10 percent of the total contract amount.

   a. Local agencies must submit their requests using the "Advance Request" section on the request for reimbursement form (**Exhibit 8.7A**) and also submit a justification for requesting the additional advance.

   b. Additional advances will be approved to meet occasional special needs required to meet exceptional production demands, not as a regular fiscal policy.

B. Procedure

1. Complete and submit to Commerce an advance request using the "Advance Request" space of the applicable weatherization program's request for reimbursement form. See **Exhibit 8.7A, *Sample Weatherization Program Request for Reimbursement*** or access current reimbursement forms on the Weatherization Program Documents page of the Commerce Web site. Submit written justification if requesting an advance payment exceeding 10 percent of the total contract amount.

2. Local agency files must include the following documentation:

   a. Copy of weatherization program contract.

   b. Copy of submitted advance request.

c. Copy of written justification submitted to Commerce if requesting an advance payment exceeding 10 percent of the total contract amount.

3. See the following working capital advance examples:

a. **Exhibit 8.6A, *Working Capital Advance Example One***.

b. **Exhibit 8.6B, *Working Capital Advance Example Two***.

c. **Exhibit 8.6C, *Working Capital Advance Example Three***.

d. **Exhibit 8.6D, *Working Capital Advance Example Four***.

SECTION 8.7 REPORTING AND REIMBURSEMENT OF EXPENSES

A. Policy

1. The payment system for local agencies is based on monthly reimbursement in the amount of actual expenditures from the previous month.

   No payment will be made until Commerce receives an accurate and complete request for reimbursement form (**Exhibit 8.7A, *Sample Weatherization Program Request for Reimbursement***).

2. Subsequent to the issuance of a working capital advance, Commerce will reimburse local agencies for expenditures which are within the budget categories reported on the request for reimbursement (**Exhibit 8.7A**). See **Section 8.6, *Issuance of Working Capital Advances***.

3. Reporting Requirements

   a. Monthly Requests for Reimbursement

      (1) Requests for reimbursement must be submitted with original signature monthly, due the 15th of each month for the previous month's expenditures. See **Exhibit 8.7A, *Sample Weatherization Program Request for Reimbursement***.

      (2) Each month must be reported on a separate form. Each fund source must be reported on a separate form.

      (3) Unpaid obligations should be included in requests for reimbursement on an accrual accounting basis.

      Exception: Unpaid obligations may be included in reports on a cash accounting system as part of a negotiated reporting requirement waiver. See *Reporting Requirement Waivers* in this section.

      (4) Monthly requests for reimbursement must be submitted even if there was no production or fiscal activity during the previous month.

      (5) Commerce will make an effort to correct incomplete or inaccurate requests for reimbursement by phone or email. If an incomplete or inaccurate request for reimbursement is returned for correction, the local agency must submit a

corrected request for reimbursement within ten working days from the date returned.

(6) Provide list of all WIDS Agency Project Numbers or Commerce Project Numbers for buildings (projects) that have Installed Measure Costs on this month's Request for Reimbursement (19-1A). The intent of this list is to support the 19-1A.

(7) Provide documentation (electronic or hard copy) to support the Request for Reimbursement (19-1A) amounts.

b. Monthly Weatherization Report for Completed Units

(1) Local agencies must enter or upload all applicable Weatherization data into WIDS by the 15th of each month for the previous month's activities..

(2) All data must be completed and current by the 15th of each month for the previous month's activities. Data includes, but is not limited to the required Milestone dates:

(a) Audit Date

(b) Passed Final Inspection Date

(c) Closed Date

(d) Cost Changes

***Example*:** If a Weatherization project passed final inspection in the previous month, the date and all required data connected to that date, must be entered or uploaded into WIDS by the 15th of the following month. If fund sources are not determined at final inspection, put costs in the "Unassigned" category.

(3) All buildings completed on or after December 1, 2010 must be reported in WIDS.

c. Final Contract Closeout Report

(1) Local agencies must submit a Final Contract Closeout Report for each funding source that accurately reflects the work completed and funds expended during the program year. See **Section 8.8, *Final Contract Closeout Report***, **Exhibit 8.8A, *Sample Final Contract Closeout Report (Forms 1-6)***, and **Exhibit 8.8B, *Sample Weatherization Contract Closeout Checklist***.

(2) Local agencies must submit hard copy reports toCommerce 45 days after the program year closes.

4. Reporting Requirement Waivers

a. Commerce may consider waivers for situations such as delayed reporting or to allow local agencies on a cash accounting system to claim documented unpaid obligations on their request for reimbursement form (**Exhibit 8.7A**).

Waivers that allow delayed reporting will not affect the working capital advance payment limit.

b. Reporting requirement waivers must be requested in writing in accordance with Commerce *General Terms and Conditions*.

5. Evaluation Data Collection and Reporting

Commerce will, from time to time, conduct an evaluation of its low-income weatherization program to determine the extent to which it is accomplishing its objectives and at what cost.

For example, Commerce will assist DOE in its national evaluation. In preparation for the evaluation, DOE requests that Commerce work with its local agencies during the evaluation period to ensure that signed client waivers are acquired enabling program access to utility and other energy vendor billing records and that account information, including account number, the name to which the account is billed and the billing address, for all energy vendors, both electric and the primary heating source, is accurately recorded for all clients. Account information must include both consumption and expenditure data. See **Exhibit 2C, *Sample Weatherization Program Utility Information Release Waiver***, for a sample client waiver.

a. Whenever possible, local agencies are encouraged to obtain 12 months pre-weatherization billing data (usage and cost).

b. Additional evaluation data collection responsibilities will be defined as needed.

B. Procedure

1. Client files must include copies of signed utility information release waivers. **Exhibit 2C, *Sample Weatherization Program Utility Information Release Waiver***, is an example of acceptable documentation.

2. Local agency files must include the following documentation:

   a. Copies of submitted requests for reimbursement (**Exhibit 8.7A, *Sample Weatherization Program Request for Reimbursement*)**. DOE, HHS, BPA, and MM request for reimbursement forms are available on the Weatherization Documents page of the Commerce website, **http://www.cted.wa.gov/portal/alias__cted/lang__en/tabID__513/DesktopDefault.aspx.**

   b. Copies of submitted ***Monthly Weatherization Reports for Completed Units* (Exhibit 8.7B**). See **Exhibit 8.7C** for completion instructions.

   c. Copies of final contract closeout reports for each funding source. See **Section 8.8, *Final Contract Closeout Report*,** for policies and forms.

   d. Copies of completed final contract closeout checklists for each funding source. See **Section 8.8, *Final Contract Closeout Report***, for policies and forms.

   e. Copies of BPA quarterly reports for applicable local agencies.

   f. Copies of approved Commerce reporting requirement waivers.

   g. Copies of evaluation data and reports requested by Commerce.

3. Local agencies must have a current W-9 on file with Commerce.

4. See Commerce *General Terms and Conditions*.

5. Local agencies must send hard copies of all applicable reports to:

   Department of Commerce
   Community Services and Housing Division
   Housing Improvements and Preservation (HIP) Unit Budget Analyst
   P O Box 42525
   Olympia WA 98504-2525

SECTION 8.8 FINAL CONTRACT CLOSEOUT REPORT

A. Policy

1. Local agencies must submit a final report for each funding source that accurately reflects the work completed and funds expended during the program year. See exhibits **8.8A, *Sample Final Contract Closeout Report (Forms 1-6)*** and **8.8B, *Sample Weatherization Contract Closeout Checklist***.

2. Local agencies must submit reports to Commerce 45 days after the program year closes.

   Failure to provide timely closeout reports in accordance with Commerce requirements may result in penalties which may include, but not be limited to, Commerce denying or delaying local agency applications in future funding rounds.

3. Local agencies must submit closeout reports after the close of the contract period, during the transfer of obligations to another local agency, or upon termination of the contract for any reason.

4. Unexpended funds returned to Commerce at the end of a contract period must be returned with Administrative and Program Support funds in proportion to contract awards.

B. Procedure

1. Local agency files must include copies of final contract closeout reports for each funding source (**Exhibit 8.8A, *Sample Final Contract Closeout Report (Forms 1-6)***).

2. See contract closeout report forms and instructions (**Exhibit 8.8B, *Sample Weatherization Contract Closeout Checklist***) provided by Commerce at least 30 days before the due date.

3. See the following sections for additional policies and procedures that pertain to final contract closeout reports:

   a. **Section 8.9, *Counting Year-End Unit Completions***.

   b. **Section 8.10, *Refunds***.

   c. **Section 8.11, *Program Income***.

   d. **Section 8.12.2, *Weatherization Materials Transfer and Inventory***.

Referenced in: 10 CFR 440.25
10 CFR 600
Commerce General Terms and Conditions
DOE Special Terms and Conditions
HHS Special Terms and Conditions
MM Special Terms and Conditions

SECTION 8.9 COUNTING YEAR-END UNIT COMPLETIONS

A. Policy

1. At the close of a contract period, local agencies must claim as completed units only those that have been inspected and certified as completed.

   a. Units must be counted in the contract period in which they are complete.

   b. Units that have been partially weatherized but not completed or inspected cannot be counted in the total production of that contract period.

2. DOE's overall investment cannot exceed the average annual cost per unit.

3. Local agencies may use their 45-day closeout period to complete commitments initiated before the end of their contract period.

   Commitments may include inspection of units to count them in program year production.

4. All goods, services, and equipment must be received by the last day of the contract to be charged to that contract.

Note: Definition of DOE Weatherized Unit

Per *WPN 04-1, 2003 (p. 25):*
To assist State and local agencies in determining what a DOE weatherized unit is, DOE offers the following definition. *A DOE Weatherized unit is: A dwelling unit on which a DOE-approved energy audit or priority list has been applied and weatherization work has been completed. As funds allow, the DOE measures installed on this unit have an Savings-to-Investment Ratio (SIR) of 1.0 or greater, but also may include any necessary energy-related health and safety measures. The use of DOE funds on this unit may include, but are not limited to, auditing, testing, measure installation, inspection, or use of DOE equipment and/or vehicles, or if DOE provides the training and/or administrative funds. Therefore, a dwelling unit that meets both the definition of a DOE weatherized unit and has DOE funds used directly on it must be counted as a DOE completed unit.*

The above definition is not intended to impede or otherwise cause difficulties to States and local agencies that have entered into a leveraging partnership where other sources of funds are involved. If there is uncertainty in determining how best to account for the completed weatherized units under such an arrangement, contact your respective Regional Office for guidance.

B. Procedure

See **Section 8.8, *Final Closeout Report***, for policies and procedures that pertain to the counting of year-end unit completions.

SECTION 8.10 REFUNDS

A. Policy

1. Local agencies may receive and re-spend refunds from property owners who choose to sell their property to non-low-income purchasers after the weatherization work has been completed by the local agency with funds awarded under prior year contracts. See exhibits **1.4.1A, *Weatherization Program Property Owner/Agency Agreement***, and **1.4.1B, *Weatherization Program Property Owner/Agency Agreement for Multi-Family Buildings***, for conditions.

2. Refunds must be used first to weatherize units in the current contract period.

3. Units weatherized with refunds must be included in the total unit count for the contract period in which they were spent. Units must be reported monthly on the ***Monthly Weatherization Report for Completed Units* (Exhibit 8.7B)**.

4. Do not include refund dollar amounts in monthly requests for reimbursement. Refund dollar amounts will be accounted for in the ***Final Contract Closeout Report* (Section 8.8)**.

B. Procedure

1. Local agency files must include the following documentation:

   a. Applicable property owner/agency agreements (exhibits **1.4.1A, *Weatherization Program Property Owner/Agency Agreement***, and **1.4.1B, *Weatherization Program Property Owner/Agency Agreement for Multi-Family Buildings*)**.

   b. ***Monthly Weatherization Report for Completed Units* (Exhibit 8.7B)**.

   c. ***Final Contract Closeout Report* (Exhibit 8.8A)**.

2. See **Section 1.4.1, *Use and Monitoring of Property Owner/Agency Agreements***.

SECTION 8.11 PROGRAM INCOME

A. Policy

1. Local agencies must track program income and expend it first to avoid reporting at year's end.

2. Local agencies must report program income if left unexpended in final contract closeout reports (See **Section 8.8, *Final Contract Closeout Report***) to account for general program income earned from the following:

   a. Activities supported by a contract award.

   b. Income resulting from grants.

3. Unless restricted by contract, local agencies may retain program income received from services provided and usage or rental fees.

4. Local agencies may use program income as follows:

   a. To pay all or part of the local agency share of allowable project costs during the same budget period.

   b. To pay for costs not included in the total approved budget if Commerce determines that such costs are directly related to the objectives of the Federal statute under which the grant was awarded (weatherization related activities for low-income clients).

5. Commerce and its funding sources have no right to any portion of general program income earned or accrued after the project ends or the contract is terminated.

B. Procedure

1. Local agencies must have in place a system for tracking all program income.

2. Local agencies must report all program income at the end of each contract period. See **Section 8.8, *Final Contract Closeout Report***, for policies and forms.

Referenced in: 10 CFR 600.124
10 CFR 600.225
WPN 06-1, 2005
DOE Special Terms and Conditions
HHS Special Terms and Conditions
BPA Special Terms and Conditions
MM Special Terms and Conditions

SECTION 8.12 INVENTORY CONTROL

A. Policy

1. Local agencies must establish a written inventory policy.

   Written inventory policies must include the coordination of all functions – including scheduling, completions, purchasing, storage, and cash flow.

2. Local agencies must maintain records, perform inventories, and maintain control systems to prevent loss, damage, or theft of equipment, tools, materials, and supplies**.**

3. Local agencies must use a master control system.

4. Quarterly physical counts must be done to verify book records.

5. A daily usage system must be a central feature of the inventory system.

6. An automatic ordering system for frequently used materials must exist.

7. All non-expendable purchases with a value of $5000 or more, and which have a useful life of more than a year, must be tagged with a unique number to reflect funding sources and must be logged into property control records for identification purposes.

8. All materials received must be accounted for by invoices from vendors which describe the material(s), number of units, unit cost, total costs, shipping charges, if any, and sales tax.

B. Procedure

1. Local agency files must include a written inventory policy.

2. See **Section 8.8, *Final Contract Closeout Report***, for policies and procedures pertaining to equipment inventory.

SECTION 8.12.1 DISPOSITION OF EQUIPMENT/VEHICLES

A. Policy

1. Equipment/Vehicles purchased for $5,000 or more:

   a. Local agencies are required to maintain an inventory for all purchases of equipment/vehicles with a useful life of one year or more and a purchase price of $5000 or more. When wanting to acquire replacement equipment/vehicle, the Local Agency (LA) may use the equipment/vehicle to be replaced as trade-in, subject to approval by DOE for DOE related program purchases, all others by Department of Commerce (Commerce).

   b. If an LA no longer has a need for the equipment/vehicle purchased with weatherization funds for a purchase price of $5000 or more, the LA must:

      (1) Notify Commerce in writing (Equipment/Vehicle Disposition Form) of its intent to dispose of vehicle/equipment. The notice must include a complete description, including the condition of the equipment/vehicle.

      (2) The LA will offer equipment/vehicle to LA within the Weatherization Program Network at no cost except for-transfer costs.

         (a) This process is coordinated with the Commerce representative.

         (b) Equipment/Vehicle will be offered to LA on a first come, first served basis.

         (c) If no LA wants the equipment it may with written Commerce approval be sold.

         (d) Once it is determined that there are no Local Agencies wanting the equipment/vehicle being offered, the sale will proceed as stated in items 2 or 3 below.

2. Equipment/Vehicle with a Fair Market Value of $5,000 or more:

   a. The LA must advertise the equipment in a local community publication, asking for sealed bids to be submitted by a specific date. The opening bid date must be published in the advertisement.

   b. Equipment/Vehicle must be sold to the highest bidder.

   c. The awarding agency (Federal Government) shall have a right to an amount calculated by multiplying current Market Value or proceeds from the sale by the awarding agency's share of the capital asset/vehicle/equipment. The remaining proceeds must be used as program income for program which originally purchased this equipment.

3. Equipment/Vehicle with a current per unit Market Value under $5,000

    a. Commerce will approve or recommend method of sale or disposition.

    b. If there are Local Agencies wanting the equipment/vehicle, then it will be offered on first-come first-served bases without cost except transfer costs.

    c. The local agency must use the income in the program which originally purchased the equipment/vehicle.

    d. Proceeds from equipment/vehicle sale must be tracked and reported as program income.

4. Equipment/Vehicles beyond repair with a minimum Fair Market Value:

    a. With Commerce's approval it can be sold for scrap value. Proceeds are to be treated and reported as program income.

    b. Copies of paperwork from salvage sale must be provided to Commerce for their records.

B. Procedure

1. Equipment/Vehicle Disposition:

    At any time during the life cycle of an equipment/vehicle whose purchase price was $5,000 or more the agency may use the equipment/vehicle to be replaced as a trade-in, subject to approval by DOE for DOE related purchases and Washington State Dept. of Commerce for all other funded purchases. For all other Equipment/Vehicle dispositions the following procedure will be followed:

2. Notice/Request for Disposition:

    When an agency determines equipment/vehicle is no longer needed, agency is required to notify Commerce Representative using the Equipment/Vehicle Disposition Form. Notice shall be in e-mail form stating reason "Equipment/Vehicle" is no longer needed or useful. Notice shall identify equipment/vehicle and provide Model#, Serial# and VIN#, and other required information in Part 1 of Equipment/Vehicle Disposition Form.

3. Equipment/Vehicle whose Fair Market Value is $5,000 or more:

    a. Commerce will give their approval or not to proceed with the disposition process by signing the completed Part 1 section of the disposition form.

b. Once approved for disposition, the LA is required to send one e-mail to all LAs within the Weatherization Network with a cc to the Commerce representative as required in Part 2 of the Equipment/Vehicle Disposition Form.

(1) E-mail shall offer equipment/vehicle at no cost to LAs within the Weatherization Network. Equipment/Vehicle will be offered on a first-come, first served bases.

(2) E-mail shall include specifications/description, age, condition, & photos if available.

(a) After 14 days the initiating LA will know whether someone wants or doesn't want this equipment/vehicle at no cost other than transfer fees.

i. LA wishing to dispose of equipment/vehicle will submit the Equipment/Vehicle Disposition Form-Part 2, to the Commerce representative indicating whether an LA within the Weatherization Network wants or doesn't want this equipment/vehicle.

(b) Commerce will review and approve or disapprove this request (Equipment/Vehicle Disposition Form) to proceed with either the sale or transfer process on part 2 of the Equipment/Vehicle Disposition Form. The decision will be based on most of the information contained in the completed Disposition Form parts 1 and 2.

i. If on a first-come first-served basis an agency was selected, Commerce and LA that has the equipment/vehicle will begin transfer process.

ii. If no LA was interested Commerce will authorize agency to begin formal sales bid process. Sale shall be publically posted and follow LA's Notice of Sale Offering (must be documented). Highest bidder, (following proper procurement practices) shall be selected and notified. Commerce will collect proceeds from sale and follow process for returning funds to awarding agency.

4. Equipment/Vehicle with a Fair Market Value of $5,000 or less:

If fair market value as determined by highest bidder is less than $5,000, then the sales process will begin with copies being sent to Commerce for their records.

a. An Equipment/Vehicle subject to the provisions of this policy whose Fair Market Value (determined by industry comparable pricing, condition, age, and useful life) is less than $5,000, is NOT subject to DOE approval and MAY be allowed to dispose of said item, with the approval of Washington State Dept. of Commerce.

b. Proceeds from this sale may be retained and if so, must be used by Local Agency's Weatherization Program operations only as program income.

5. Documentation Required:

   Local agency files must include at a minimum the following:

   a. Copy of completed equipment/vehicle disposition form.

   b. Copy of email notice offering equipment/vehicle to LA

   c. Copy of award communication.

   d. Equipment/Vehicle sales receipt.

6. Equipment/Vehicles beyond repair with a minimum Fair Market Value:

   a. With Commerce's approval may be sold for scrap value. Proceeds are to be treated and reported as program income.

   b. Copies of paperwork from salvage sale must be provided to Commerce for their records.

7. Income Reporting & Close-out Requirements:

   See **Section 8.11, *Program Income*** & See **Section 8.8, *Final Contract Closeout Report***, for policies and procedures pertaining to reporting program income during contract closeout.

SECTION 8.12.2 WEATHERIZATION MATERIALS TRANSFER AND INVENTORY

A. Policy

1. Local agencies may transfer materials inventory from one contract to another, within the same program, and between different programs.

   Transfers within the Same Program

   a. At the close of a program contract period, unused materials may be purchased by the same program in the next contract period.

   b. Local agencies must report the value of materials as a receipt and expenditure to the new contract for the program purchasing them, and as a credit to the program which is selling them. The credit is shown on the Final Contract Closeout Report as a reduction in expenditures to date for materials. See **Section 8.8, *Final Contract Closeout Report,*** for additional information and forms.

2. Materials inventory transfers may be made at any time during a contract period, as well as at the close of a contract when there is a remainder of unused materials on hand.

3. Local agencies must document the receipt and transfer of materials.

4. Transfers must be reported in the month the transfer takes place on the monthly request for reimbursement form (**Exhibit 8.7A, *Sample Weatherization Program Request for Reimbursement*)**.

5. In the case of a transfer at the end of a contract, the transfer must be reported in the ***Final Contract Closeout Report* (Section 8.8)**.

B. Procedure

1. Local agency files must include the following documentation:

   a. Copies of requests for reimbursement forms (**Exhibit 8.7A**).

   b. Copies of applicable forms in the ***Final Contract Closeout Report* (Exhibit 8.8A)**.

2. See **Section 8.8, *Final Contract Closeout Report***

CHAPTER 9 HEALTH AND SAFETY

SECTION 9.1 LOCAL AGENCY AND/OR SUBCONTRACTOR HEALTH AND SAFETY

A. Policy

The Weatherization Assistance Program provides weatherization services in a manner that minimizes risk to workers. The Weatherization Assistance Program remedies energy-related health and safety hazards, which are necessary before or because of, the installation of weatherization materials.

B. Procedure

All reasonable precautions must be taken against performing work on homes that will subject workers to health and safety risks. The standards included here provide only general guidelines for health and safety concerns. Detailed specifications regarding worker health and safety are found in OSHA Safety and Health Standards (29 CFR 1926\1910) published by the U.S. Department of Labor; and corresponding WISHA Rule WAC 296-62. Worker safety rules of general application are also contained in State of Washington General Safety and Health Standards, Chapter 296-24 WAC, published by the Department of Labor and Industries. These standards are applicable to all workers providing services using funding under the DOE WAP program.

1. **Training and Monitoring**

The Weatherization coordinator is responsible for maintaining the local agency's weatherization health and safety program. Specific responsibilities may be delegated to adequately trained and competent personnel.

a. **Employee Training** - Employees shall receive training prior to field work (auditors, inspectors, crew, and subsontractors).

Exception: Newly hired or reassigned employees shall receive training within 3 months of starting field work. Until training is complete, employees shall work with a trained employee.

Field Safety Training will include:

(1) Crew Leads:

(a) OSHA 30 training.

(b) All field staff (auditors, inspectors, and crew) shall have current First Aid and CPR proficiency cards. (Per WAC 296-155-120.

(2) Weatherization Workers:

(a) OSHA 10 training.

(b) All field staff (auditors, inspectors, and crew) shall have current First Aid and CPR proficiency cards. (Per WAC 296-155-120.

(3) Auditors and Inspectors:

(a) OSHA 10 training

(b) All field staff (auditors, inspectors, and crew) shall have current First Aid and CPR proficiency cards. (Per WAC 296-155-120)

b. **Safety Meetings -** Safety meetings shall be conducted monthly. The content of meetings should focus primarily on issues of current importance, for example, OSHA requirements, new information on safety procedures, or product related information (MSDS). During the meeting, employees should be encouraged to ask questions.

(1) The main purpose will be the ability of the employee to retain and understand information covered during the meeting.

(a) Limit the amount of information covered to just one issue, when possible, such as lifting, tool maintenance, electrical equipment, or understanding of Material Safety Data Sheets.

(b) Posters relating to such matters are available and should be displayed during the month that particular issue is discussed.

(2) Minutes of each meeting shall be recorded and kept on file, and include:

(a) list of employee attendance; and

(b) topics discussed and concerns.

c. On-Site Inspection

An announced, on-site inspection of each crew shall be conducted monthly by the Weatherization Coordinator or Analyst/Instructor. This inspection will include:

(1) Ascertaining the extent of the client's understanding of weatherization activities being performed. If health and safety issues are documented, this information shall also be included in the discussion.

(2) Inspecting condition of personal safety equipment and confirming that all crew members are adequately supplied. Crew members must wear prescribed equipment if warranted by the activities being conducted.

(3) Checking that each crew vehicle (as required by OSHA for all jobsites) is supplied with a:

(a) Complete first aid kit designed to provide basic first aid;

(b) Adequately charged hand-operated fire extinguisher, designed for all three types of fire (electrical, wood, and liquid). Ensure service date has not expired; and

(c) A Hazard Communication Plan Binder containing list of hazardous chemicals (common and chemical name), location where they are used, usage and hazardous information (signs/symptoms of exposure and required first aid), and list of Material Safety Data Sheets. (Note: Copies of MSDS are not required if master files are accessible by all crew members.) For more information see https://www.osha.gov/dsg/hazcom/index.html.

(4) Inspect hand and power tools and similar equipment. Any found to be defective should be tagged and removed from service. Equipment not in use shall be properly stored.

(5) Inspect work area to ensure activities are conducted in a safe manner, including provision of adequate light, proper disposal of debris, connection of power equipment to a ground fault circuit interrupter, and resolution of health and safety issues.

2. General Work Practices

Workers must take all reasonable precautions against performing work on homes that will subject workers or occupants to health and safety risks. Minor repairs and installation may be conducted only when necessary to effectively weatherize the home; otherwise these measures are not allowed.

The prevention of occupationally induced injuries and illnesses will be given precedence over production activities. To the greatest degree possible, the contractor will ensure that all equipment and facilities are in compliance with the Washington Industrial Safety and Health Act (WISHA) standards. Weatherization personnel are required to exhibit caution and care during the course of the workday.

a. The Crew Leader/Foreman

The crew leader/foreman is responsible for being in compliance with any instructions pertaining to health or safety as they apply to crew production activities:

(1) Contact client before performing work. Provide the opportunity for discussing crew activities that will occur and occupant safety while work is in progress. When subcontractors are used, the program manager will be responsible for client contact.

(2) Ensure each crewmember is reasonably protected when production activities are being conducted.

(3) For pre-1978 buildings: Satisfy Section L. Lead-Based Paint Hazard Control. Inform the client of the nature of the work to be done, and encourage that children be off-site while the work is taking place.

b. Personal Protective Equipment

The use of personal protective equipment will be strictly enforced. Hearing and ear protection are required for individuals working around high decibel equipment. Each crew person will wear a respirator, protective eyewear, and protective clothing when necessary. Respiratory protection is required for individuals working in high dust environments, including when using loose fill insulation blowing equipment, installing materials in attic and floor areas, and during prolonged use of grinding or power saw equipment. When working in an environment in which lead based paint dust will be generated, each employee within the work area may be required to wear a properly fitted National Institute of Occupational Safety and Health (NIOSH)-approved HEPA respirator and protective clothing which will be removed upon vacating the work area. (See OSHA and WISHA rules, Section L.3, Other Federal Government Regulations.)

c. Hand and Power Tools

All hand and power tools and similar equipment shall be maintained in a safe condition. This equipment will be inspected daily, and any equipment found defective shall be tagged and removed from service until it has been repaired or replaced. Protective guards are to be in place and functioning properly while a power tool is in use.

All electrical equipment, tools, and extension cords shall be grounded properly. All electrical power for 120-volt or greater will be protected by a ground fault circuit interrupter (GFCI). Any extension cords found defective (insulation worn or cut, or frayed wires) are to be removed from the job site and disposed of.

It is recommended that, when using power tools on surfaces that contain lead-based paint, a HEPA dust collection attachment be used. Tools shall be cleaned after use.

d. General Fall Protection

Portable ladders shall be placed on a substantial base at a four-to-one pitch. Extension ladders are to be extended a minimum of 36 inches above the landing (i.e., where roof access occurs), or where not practical, be provided with grab rails and be secured against movement while in use. Portable metal ladders shall not be used where they may contact electrical conductors.

The use of ladders with broken or missing rungs or steps, broken or split side rails, or with other faulty or defective construction is prohibited. When ladders with such defects are discovered, they shall immediately be withdrawn from service.

Extra precaution is required while weatherization activities are conducted on the roof area. When an individual is above 16 feet or adequate stability cannot be maintained, safety gear, such as harness or safety straps, is required.

e. Housekeeping Activities

All scrap lumber, waste material, and debris shall be removed from the immediate area as work progresses. An area outside the home should be designated for storing such material, which should be removed from the premises at the end of each workday or when the job is completed. (Local agencies and subcontractors are encouraged to recycle materials whenever possible.)

Equipment shall be removed from the immediate work area and properly stored when no longer required or when each phase of the weatherization process is completed. Individuals shall be equipped with a tool belt or vest, in which hand tools not in use are then properly stored and readily accessible when required.

When lead-based paint dust is generated during the course of work, the area must be cleaned no later than the end of each workday. All materials used in the debris collection system removed in a lead-safe manner, the area thoroughly vacuumed using a HEPA vacuum, and wash and wipe down the area with a detergent solution.

f. Attic/Crawl Space Areas

When possible, cut out holes required for venting before work is started, installing vents after weatherization activities are completed. This procedure provides both additional ventilation and light.

Precaution shall be taken when working in areas with low clearance. Work in areas with less than 18-inch clearance may be waived.

Before weatherization activities are conducted, the following is required:

(1) Health and safety corrective action documented on the Job Order Sheet is to be completed.

(2) Specific instructions are read and understood. Further clarification may be required from the Energy Analyst.

(3) An adequate and safe means of access is provided.

(4) Each individual has accessed the area and become familiar with existing conditions.

g. Pollutants

Removal of pollutants is allowed and is required if they pose a risk to workers. If pollutants pose a risk to workers and removal cannot be performed or is not allowed by the client, the unit must be deferred. If project is deferred, local agency must use a deferral form to document observed conditions and household pollutants. The client must be provided with proper disposal site information for household pollutants requiring removal.

SECTION 9.2 CLIENT HEALTH AND SAFETY

A. Policy

The Weatherization Assistance Program provides weatherization services in a manner that minimizes risk to clients. The Weatherization Assistance Program remedies energy-related health and safety hazards, which are necessary before or because of, the installation of weatherization materials.

The Weatherization Assistance Program defers work on dwellings without providing weatherization services when problems are encountered that are beyond the scope of the Weatherization Assistance Program. For the policies and procedures for deferral, see **Section 5.5, *Deferral Standards***.

When a person's health is fragile or the work activities would constitute a health or safety hazard, the occupants at risk will be required to leave the home until work is completed. Temporary relocation of at-risk occupants may be allowed on a case-by-case basis, but requires prior written approval from Commerce. Or the work may be deferred until such time that the conditions or circumstances are more favorable.

B. Procedure

1. Awareness

   Awareness of potential hazards is essential to providing quality services. DOE's preferred approaches to common hazards are provided in ***Weatherization Program Notice*** (WPN) ***11-6***. Other energy-related hazards are considered on a case-by-case basis.

2. Prevention

   Prevention is the best solution to any health and safety hazard. The Weatherization Assistance Program takes all reasonable precautions when performing work on homes that will subject clients to health and safety risks. Before beginning work on the residence, the agency must take into consideration the health concerns of each occupant, the condition of the dwelling, and the possible effect of work to be performed on any particular health or medical condition of the occupants. See **Exhibit 5.S1, *Mold Assessment and Release example*** and **Exhibit 5.S2, *Pollution Source Survey example*.**

SECTION 9.3 INDOOR AIR QUALITY – MECHANICAL VENTILATION

A. Policy

1. Mechanical ventilation Standard ASHRAE 62.2 – 2013 (Appendix A Existing Buildings) is required to be met to the fullest extent possible, when performing weatherization activity.

   Purpose:
   This standard defines the roles of and minimum requirements for mechanical and natural ventilation systems and the building envelope intended to provide **Acceptable Indoor Air Quality** (IAQ) in low-rise residential buildings.

2. DOE's ***Weatherization Program Notice*** (WPN) ***11-6*** available at (*http://waptac.org/*), allows exception to the implementation of Standard ASHRAE 62.2 as follows:

   Implementing ASHRAE 62.2 is not required where acceptable indoor air quality already exists as defined by ASHRAE 62.2.

   NOTE: At this time, the State of Washington does not have the scientific data to support the objective determination of Acceptable Indoor Air Quality as required by DOE to allow this exception. Exceptions are not allowed.

3. The Local Agency shall ensure completion of Mechanical Ventilation worksheet, pre- and post-weatherization, documenting compliance with ***ASHRAE Standard 62.2 – 2013*** *Ventilation and Acceptable Indoor Air Quality in Low-Rise Buildings (Appendix A Existing Buildings)*. See **Exhibit 9.3, *Mechanical Ventilation Worksheet*** example. See also, Specifications **Section 2.2, *Audit requirements***, **Section 4.5, *Mechanical Ventilation***, *and* **Section 10.0.1, *Mechanical Ventilation***.

4. Provide client with information on function, use and maintenance of ventilation system and components. Include disclaimer that ASHRAE 62.2 does not account for high polluting sources or guarantee indoor air quality.

B. Procedure

NOTE: See above Policy for guidance. Procedure list under review/development/restructure.

SECTION 9.4 COMBUSTION SAFETY (old Policy 5.3.1)

A. Policy

1. All homes with combustion appliances must be tested for combustion safety both pre- and post-weatherization work. See **Exhibits 5.3.1A, *Combustion Safety Test Report*** and **5.3.1B, *Technical Support Document***, for required form and supporting material.

2. If CO is above acceptable levels, weatherization funds may be used to clean and repair appliances owned by low-income occupants.

   In rentals, if the tenant does not own the appliance, weatherization funds can be used for cleaning, but not for repair.

3. After combustion appliance replacement or service, no additional weatherization work can be done unless the CO levels are within acceptable ranges.

   Exception: ovens and ranges

4. If deferral is required, the local agency shall notify the owner/client in writing of the health and safety issue.

Allowable Costs

Combustion safety testing and appliance cleaning & repair are allowable costs under DOE, HHS, BPA and MM funds. These measures fall within the total health and safety measures and repairs limits (See **Chapter 9, *Health and Safety***). These measures do not need to be included in the SIR calculation for all fund sources or in the DOE per home expenditure average. See **Chapter 6, *Allowable Costs***, for allowable expenditures.

Specific fund source limitations or allowances are as follows:

BPA: Units must be electrically heated in BPA service territory.

B. Procedure

1. Programmatic

   a. Client files must include the following documentation:

      (1) Results of pre- and post-weatherization combustion safety report for every appliance tested. See **Exhibit 5.3.1A, *Combustion Safety Test Report***.

      (2) Receipts or invoices for any corrective work.

(3) Documentation of installation, location, and model type.

b. See **Exhibit 5.3.1B, *Technical Support Document***.

c. See **Chapter 6, *Allowable Costs***.

d. See **Chapter 9, *Health & Safety***.

2. Required Installation Standards and Materials Specifications

See ***Specifications for the Low-Income Weatherization Program*** on Commerce's Weatherization Documents Web page.

3. Best Practices

See ***EOW Field Guide***.

SECTION 9.5 SMOKE, CARBON MONOXIDE DETECTORS, AND FIRE EXTINGUISHERS *(old Policy 5.3.2)*

A. Policy

1. Smoke Detectors:

   a. Local agencies have the option of installing smoke detector(s). When installed, smoke detectors shall be installed in accordance with manufacturer's requirements.

   b. Replacement of operable smoke detectors is not an allowable cost.

2. Carbon Monoxide (CO) Detectors:

   a. If operable CO detectors are not present, Local agencies shall install a minimum of one carbon monoxide (CO) detector in every dwelling unit.

   b. Replacement of operable CO detectors is not an allowable cost.

   c. Installed detectors shall have the capability to accurately detect and display low levels of carbon monoxide to 15 ppm.

   d. Local agencies shall provide the occupant(s) of the dwelling unit with verbal and written information regarding the following:

      (1) Dangers of CO.

      (2) How to operate and reset the CO detector.

      (3) How to read the CO detector.

      (4) How to respond to CO levels above 10 ppm.

      (5) How to change the batteries.

3. Fire Extinguishers:

   a. Providing Fire Extinguishers is allowed only when solid fuel is present.

Allowable Costs

Smoke detector, carbon monoxide detector, and fire extinguisher installation is an allowable health and safety cost under DOE, HHS, BPA, and MM funds. This measure falls within the total health and safety measures and repairs limits. These measures do not need to be included in the SIR calculation for all fund sources or in the DOE per home expenditure average. See **Chapter 6, *Allowable Costs***, for allowable expenditures

Specific fund source limitations or allowances are as follows:

BPA: Units must be electrically heated in BPA service territory.

B. Procedure

1. Programmatic

   a. Client files must include documentation of the following:

      (1) Carbon monoxide detector installation.

      (2) Detector location(s).

      (3) Detector model type.

      (4) Delivery of consumer conservation education.

   b. Local agencies must keep a copy of carbon monoxide detector model specifications for all models installed in agency files.

   c. See **Chapter 6, *Allowable Costs***.

2. Best Practices

   See ***EOW Field Guide***.

SECTION 9.6 BIOLOGICALS AND UNSANITARY CONDITIONS, INCLUDING MOLD AND MOISTURE

A. Policy

Remediation or repair of conditions leading to, or promoting, biologicals and unsanitary conditions, including mold and moisture related problems is allowed within the guidelines as detailed in this section.

1. **Biological concerns and unsanitary conditions** (odors, mustiness, bacteria, viruses, raw sewage, rotting wood, etc.): Remediation of conditions that may lead to or promote biological concerns and unsanitary conditions is allowed. Remediation does not include septic system repair or replacement. Addressing bacteria and viruses is not an allowable cost. Deferral may be necessary in cases where a known agent is present in a home that may create a serious risk to occupants or weatherization workers. See **Section *5.5, Deferral Standards*.** For rentals, sanitary conditions are the landlord's responsibility. Local agency must inform the owner of their legal responsibilities and liabilities under RCW 59.18.060.

2. **Documentation of mold condition(s):** The Local Agency shall record mold conditions found prior to weatherization in the client file. See **Exhibit 5.S1, *Mold Assessment and Release Form example***. Documentation shall include the location and an estimate of the area in square feet as well as photographs and a narrative description of all observed mold conditions found on surfaces in the unit. Where severe mold and moisture issues cannot be addressed, deferral is required. See **Section *5.5, Deferral Standards*.**

3. **Client pre-work notification:** If weatherization work will be done, the Local Agency shall provide to the occupant and owner of the dwelling unit a written description of the proposed work that is to be performed, which includes notification that the work to be performed is expected to alleviate the mold and moisture creating conditions. The occupant and owner shall sign a statement acknowledging receipt of the information. A copy of the signed statement and the pre-weatherization mold report shall be retained in the client file. See **Exhibit 5.S1, *Mold Assessment and Release Form example***.

4. **Additional client notification materials:** In dwelling units where mold conditions have been identified, the Local Agency shall give to the dwelling's occupant(s) a copy of the EPA booklet *"A Brief Guide to Mold, Moisture, and Your Home"* available at (**http://www.epa.gov/mold/moldresources.html**) before the start of any work. The Local Agency shall document in the client file that this booklet was received by the occupant(s). This verification will include a signed statement from the occupant(s) that they received the EPA booklet.

5. **Worker training:** The Local Agency shall provide training in the mold inspection and documentation protocols established by the Department of Energy for all staff charged with assessing projects for weatherization. Procedures for worker protection are found in U.S. Department of Labor Occupational Safety and Health (OSHA) *"A Brief Guide to Mold in the Workplace"* *http://www.osha.gov/dts/shib/shib101003.html*. See also **Section 9.1, *Local Agency and/or Subcontractor Health and Safety***.

6. **Moisture Related Problems:** Limited water damage repairs that can be addressed by weatherization workers and correction of moisture and mold creating conditions are allowed when necessary in order to weatherize the home and to ensure the long term stability and durability of the measures.

7. **Drainage, gutters, down spouts, extensions, flashings, sump pumps, landscape, and related items:** Major drainage issues are beyond the scope of the Weatherization Assistance Program. Homes with conditions that require more than incidental repair must be deferred.

B. Procedure

NOTE: See above Policy for guidance. Procedure list under review/development/restructure.

SECTION 9.7 ELECTRICAL

A. Policy

1. Electrical, other than Knob-and-Tube Wiring

   a. Minor electrical repairs are allowed where health or safety of the occupant is at risk.

   b. Upgrades and repairs are allowed when necessary to perform specific weatherization measures

2. Electrical, Knob-and-Tube Wiring

   a. Minor upgrades and repairs necessary for weatherization measures and where the health or safety of the occupant is at risk are allowed.

   b. Must provide sufficient over-current protection prior to insulating over knob-and-tube wiring.

B. Procedure

1. Programmatic

   a. Client files must include the following documentation:

      (1) Knob-and-Tube inspection report performed by a licensed electrician.

      (2) Minor electrical repair justification.

      (3) Paid invoices for all work done by a licensed electrician.

SECTION 9.8 LEAD-BASED PAINT *(includes old Policy 1.10)*

A. Policy

1. All weatherization agencies must comply with the requirements of Environmental Protection Agency (EPA) Lead; Renovation, Repair and Painting Program (RRP) *Final Rule, 40 CFR Part 745, Subpart E, Residential Property Renovation, Pre-Renovation Lead Information Rule* or applicable state Washington Administrative Code (WAC).

2. Weatherization requires all weatherization crews working in pre-1978 housing to be trained in Lead Safe Weatherization (LSW).

3. Deferral is required when the extent and condition of lead-based paint in the house would potentially create further health and safety hazards. See **Section *5.5, Deferral Standards***

4. Insofar as it exceeds the cost of allowable energy conservation measures the cost of LSWx (labor, material, and related costs) is a health and safety cost.

5. Equipment purchases used specifically for testing for lead or other health risks are a health and safety cost.

6. A lead hazard information pamphlet and written notification of the scope, location, and expected starting and completion dates of proposed work will be provided to owners and tenants of homes and multi-family housing built prior to 1978. If a determination is made in accordance with applicable EPA rules that lead-based paint is not present in the areas affected by the proposed work, a copy of the determination must be included with the notice.

   a. Local agencies will provide the EPA pamphlet, *"Renovate Right"* or reproductions of it when copied and presented in full before renovation activities begin.

   b. Notification will be provided in the native language of the client if EPA has made non-English versions of the pamphlet available. If a pamphlet in the client's native language is not available, the English version shall be presented.

   c. Notification by certified mail must be provided no more than 60 days and no fewer than seven days before renovation activities begin. The notification requirement applies even if only common areas, and not individual dwelling units, will have worked performed.

7. Local agencies must secure written acknowledgement that the owner has received notification. If the property is a rental, local agencies must obtain written

acknowledgment from the tenant head of household. See the *EPA Small Entity Compliance Guide to Renovate Right*.

If local agencies are unable to secure written acknowledgement from an adult occupant, the local agencies must comply with one of the following:

a. Certify in writing that notification has been delivered to the dwelling and that the local agency has been unsuccessful in obtaining a written acknowledgment. See the Future Sample Pre-Renovation Form as found in the EPA pamphlet, *"Renovate Right"*.

b. Obtain a certificate of mailing at least seven days prior to the renovation.

8. All homes must receive a comprehensive, on-site, home energy audit prior to receiving weatherization services. Include the cost of this audit in the average cost per home.

B. Procedure

1. Client files must include the following documentation, as applicable:

   a. Determination that lead-based paint is not present in the area affected by the renovation.

   b. Signed and dated acknowledgments of receipt of notification.

   c. Certifications of attempted delivery.

   d. Certificates of mailing.

   e. Records of notification activities performed regarding common area renovations for multi-family housing.

2. Continue to comply with the EPA (**www.epa.gov**) Pre-Renovation Education Rule by reference to 40 CFR Subpart E, § 745.84; Information distribution requirements. Check with state, county and local municipalities for applicable local regulations. .

SECTION 9.9 ASBESTOS

A. Policy

Disturbing ***Asbestos Containing Material (ACM)*** in the course of performing weatherization work is allowed by properly trained and certified workers.

1. When ACM is present or assumed, and will be disturbed during the course of work, a local agency shall contract with a Certified Asbestos Firm or utilize properly trained and certified workers (***Competent Person*** *per WAC 296-62-07728*). For examples see **Exhibit 9.9, *Asbestos Standard Operating Procedures (SOP)*** specific to the materials being disturbed. These SOP examples were prepared by a WA State Certified Asbestos Supervisor *(per WAC 296-62-07703)*.

2. Local agencies may defer specific measure(s) or the entire weatherization project due to ACM. See **Section 5.5 *Deferral Standards***.

3. Asbestos abatement is not approved as a health and safety weatherization cost.

4. Provide asbestos safety information (both are available at EPA's website www.epa.gov: (*An Introduction to Indoor Air Quality (IAQ) Asbestos* and *Asbestos in the Home*) to every client. Local agency shall document in the client file that the occupant received the asbestos safety information.

5. When friable ACM is present or assumed a blower door test shall not be performed.

6. Testing material(s) for ACM is allowable. All testing must be performed by a certified Asbestos Hazard Emergency Response Act (AHERA) Building Inspector. If a local agency tests for ACM, test results must be provided to the client. Include in client file, test results and client signature of the receipt of test results.

3. **Building Surfaces**:

   a. Removal of siding is allowed to perform energy conservation measures. All precautions must be taken not to damage siding. Asbestos siding should never be cut or drilled. Where possible, insulate through home interior.

   b. For incidental removal or disturbance of acoustical ceiling texture (ACT) sometimes referred to as "popcorn" the local agency Competent Person must follow a Standard Operating Procedure (SOP). For example, see **Exhibit 9.9, *Asbestos Standard Operating Procedures (SOP)*.**

4. **Vermiculite**:

   a. Once vermiculite is observed, do not disturb the vermiculite or any surfaces supporting or enclosing it. Examples: Do not enter attic. Do not cut hole for fan. If

vermiculite is observed in wall (evident in crawlspaces or around outlets or junction boxes) do not cut into wall.

Exception: In situations where protection of the client living area can be established, weatherization work may continue by workers with the proper training, certification, and a Standard Operating Procedure.

b. Commerce does not recommend asbestos testing on Vermiculite as it is not a homogenous material and the results are not conclusive.

c. Removal (abatement) is not allowed.

d. When vermiculite insulation is observed in walls or attic, do not perform blower door testing.

5. **Asbestos tape and covering materials on pipes, ducts, furnaces, and other small covered surfaces**:

a. Assume asbestos is present in covering materials.

b. Encapsulation is allowed by a Competent Person. The local agency must follow a Standard Operating Procedure (SOP).

c. Removal may be allowed by a Competent Person on a case by case basis.

d. If asbestos tape is observed inside the duct, no diagnostic testing shall be performed prior to encapsulation.

B. Procedure

1. Programmatic

a. Client files must include the following documentation:

(1) Signed and dated acknowledgments of receipt of asbestos safety information.

(2) ACM test results

(3) Paid invoices for all contractor billing including tests done by a AHERA inspector.

b. Contractor and crew certifications.

SECTION 9.10 RADON

A. Policy

1. Whenever site conditions permit, exposed dirt must be covered with a vapor barrier.

2. Provide EPA's *"Consumer's Guide to Radon"* (http://www.epa.gov/radon/pubs/consguid.html) to any clients in homes with known high radon levels and all clients in the following counties: Clark, Ferry, Okanogan, Pend Oreille, Skamania, Spokane, Stevens.

3. Testing is allowed in locations with high radon potential.

4. Regardless of the level of radon discovered in the home, agencies shall have clients sign a radon release form giving the agency approval to proceed with weatherization work.

5. In homes with identified radon problem, work that would exacerbate this problem shall be deferred.

6. Radon abatement is not an allowable activity under the weatherization program. However, those costs associated with taking precautions in a dwelling known to have radon problems are allowable weatherization expenditures. These costs are allowable if an energy audit indicates that weatherization techniques would help in radon remediation. Local agencies should establish sound radon-related strategies in doing weatherization work on homes and taking precautions in homes where there maybe a radon concern. The Bonneville Power Administration funded a statewide radon-monitoring program in the mid-1980s and concluded that radon is not prevalent statewide in Washington. Radon testing can be done by local agencies to determine if there is radon present. If radon levels are found to be present in the home, prior to beginning work installing a mitigation system, the local agency must provide Commerce with evidence this alteration meets all of the following:

   a. Allowed by the local authority having jurisdiction (ie building department),

   b. Meets all applicable codes, and

   c. SIR of 1 or greater, other than allowable Health and Safety components.

B. Procedure

NOTE: See above Policy for guidance. Procedure list under review/development/restructure.

SECTION 9.11 PESTS

A. Policy

Pest removal is allowed only where infestation would prevent weatherization. Infestation of pests may be cause for deferral where it cannot be reasonably removed or poses health and safety concern for workers. See **Section *5.5, Deferral Standards*.** Screening at points of access is allowed to prevent intrusion.

The local agency shall inform the client of observed pest conditions and document in the client file.

B. Procedure

NOTE: See above Policy for guidance. Procedure list under review/development/restructure.

Department of Commerce
Innovation is in our nature.

Specifications and Standards

For Managing the Low-income Weatherization Program

Specifications - Table of Contents (TOC)

for
United States Department of Energy (DOE)
United States Department of Health and Human Services (HHS)
Bonneville Power Administration (BPA)
and
Matchmakers (MM)

Prepared By:
Washington State Department of Commerce
Community Services and Housing Division

April 2009 Edition

(with 2010 through 2014 revisions)

WEATHERIZATION WORKS

April 2009
(Revised July 2013)

Specifications and Standards

for Managing the Low-Income Weatherization Program

Table of Contents

		Last Modified
Section 1	General Requirements	July 2013
Section 2	Energy Audits	July 2014
Section 3	Combustion Safety Testing (SWS Section 2)	July 2014
Section 4	Diagnostic testing	July 2012
Section 5	Building Envelope Air Sealing (SWS Section 3)	July 2013
Section 6	Attic/Ceiling Insulation (SWS Section 4)	July 2012
Section 7	Wall Insulation (SWS Section 4)	July 2013
Section 8	Crawlspace/Underfloor/Perimeter Insulation (SWS Section 4)	July 2012
Section 9	Moisture Control	July 2012
Section 10	Mechanical Ventilation (SWS Section 6)	July 2014
Section 11	Dehumidifiers (SWS Section 2)	June 2006
Section 12	Air Conditioning and Heating Systems (SWS Section 5)	July 2014
Section 13	Heating and Cooling Ducts (SWS Section 3, 4, and 5)	July 2012
Section 14	Thermostats (SWS Section 5)	June 2006
Section 15	Water Pipe Insulation in Unconditioned Spaces	April 2011
Section 16	Water Heater Insulation (SWS Section 7)	April 2009
Section 17	Windows (SWS Section 3)	July 2013
Section 18	Doors (SWS Section 3)	April 2011
Section 19	Carbon Monoxide Detectors (SWS Section 2)	July 2014
Section 20	Smoke Detectors (SWS Section 2)	July 2012
Section 21	Lead Based Paint (SWS Section 2)	April 2011
Section 22	Low-cost No-cost Measures (SWS Section 7)	June 2006
Section 23	Lighting Retrofits (SWS Section 7)	April 2010
Section 24	Compact Fluorescent Lamps (SWS Section 7)	April 2007
Section 25	Refrigerators (SWS Section 7)	July 2014
Section 26	Mobile Homes (SWS for Manufactured Housing)	July 2013
Section 27	Multi-family (SWS for Multifamily Homes)	July 2013

Section 1.0 General Requirements

Specs TOC

The Local Agency shall meet program requirements for insurance, licensing, labor standards, warranties and guarantees, applicable permit compliance, applicable code and regulation compliance, applicable staff certifications, and site clean-up and salvage. All work shall be performed in a professional manner following standard residential construction practices.

Weatherization projects shall be weatherized in accordance with the State of Washington Weatherization Manual (Policies and Procedures, Specifications and Standards, and Supporting Documents). The more specific requirements take precedence over the general requirements. In an instance when a requirement cannot be met, document in the client file why and what actions were taken. For best practices, refer to the ***Energy OutWest (EOW) Weatherization Field Guide***.

1.1 Subcontractors

The following requirements apply to subcontractors (Service Dealers) who work in units that are to be weatherized.

1.1.1 Subcontractor license and insurance requirement

All Subcontractors must be licensed, bonded and insured in accordance with Commerce policy and state law. Copies or printouts of individual contractor license, insurance and bonding information available from the Washington State Department of Labor and Industries contractor web site (**https://fortress.wa.gov/lni/bbip/**) must be kept on file for all contractors and updated, at a minimum, annually.

If the client has a service dealer of record, it is allowable for the Local Agency to contract with that dealer to perform the necessary work, if the dealer is fully insured and licensed.

Dealer of Record defined*: A service dealer who has been the client's supplier for a period of time.*

1.1.2 Competency

It is important that installers and technicians be qualified to do the work required under this program. The Local Agency should be aware that there are many trades for which the State of Washington does not require workers to have a professional license. Therefore, the competence of the installer or repair technician must be determined by other means such as the general reputation of the business, competency certifications provided by equipment manufacturers, or by technical schools with Heating, Ventilation, and Air Conditioning (HVAC) or other programs.

1.2 Warranties

The Local Agency and all Subcontractors shall provide warranties in writing against any defect in the material, manufacture, design or installation of all materials, equipment, or products that is found within one (1) year from the date of completion of installation. The defects found within the warranty period shall be remedied without charge and within a reasonable period of time. The warranty information shall be given to the occupant and a copy placed in the client file.

1.3 Code compliance

The Local Agency shall require all Local Agency crews and Subcontractors installing all materials, equipment, or products to comply with all applicable federal, state, and local laws and code regulations.

1.3.1 Permits

A copy of ALL permits obtained for a job, whether by the Local Agency or by a Subcontractor, shall be included in the client or project file.

***Exception*:** If a physical permit is not available, evidence of permit (i.e. documentation of the online record) must be in the client or project file.

1.4 Asbestos

When the presence of asbestos is suspected and likely to be disturbed during the installation, modification or replacement of any materials, equipment or products, all health and building regulations and codes requirements shall be followed. Refer to *Washington Administrative Code, Chapter 296-65* (**http://www.lni.wa.gov/wisha/rules/asbestos/Default.htm**). An asbestos abatement work permit must be obtained from the local building department, or from the state of Washington, Department of Labor and Industries prior to performing work that would result in disturbing the asbestos material.

1.5 Materials

All materials used shall meet the specifications found in **Exhibit 5.S10, *Standards for Weatherization Material Specifications***.

1.5.1 Alternate materials

The Local Agency shall get written approval to use alternate materials from the Commerce monitor assigned to the Local Agency prior to the use of such materials.

1.6 Manufacturer's requirements

The Local Agency and Subcontractors shall conform to all manufacturer's requirements regarding installation, use and maintenance of all materials, equipment, or products installed or supplied through the weatherization program.

1.7 Certificate of insulation

The certificate of insulation shall contain the following information, and shall be completed in ink and signed by the installer:

a. Address of residence.

b. Date of installation.

c. Name, address and phone number of installer.

d. Amount (number and size of bags).

e. Final R-value of insulation.

f. Area of space in square feet that was insulated.

g. Settled density coverage chart for loose-fill insulation (or post empty bag with chart).

1.7.1 Posting of certificate

Upon completion of the installation of the insulation, the completed Certificate of Insulation shall be posted in the interior of the area insulated in a location nearby, and visible, from the access to the area. A copy of the certificate shall also be kept in the client file of the Local Agency.

Exception: If the Certificate of Insulation cannot be posted in a visible location near the access to the area of insulation installation, the certificate may be posted near the service panel, electrical panel, or other area easily accessed by service technician. Document the certificate posting location in client file.

1.7.2 Posting empty bag/wrapper

Upon completion of the installation of the insulation, the Local Agency or Subcontractor shall post near the Certificate of Insulation an empty bag or wrapper from the insulating material that was installed.

1.7.3 Delivery of certificate

The completed certificate shall be kept in the permanent file of the Local Agency. A copy of the certificate will also be given to the client.

Section 2.0 Energy Audits

Specs TOC

All single family and multi-family dwellings must receive a comprehensive, on-site, energy audit prior to receiving weatherization services.

2.1 Scope of Energy Audit

The Local Agency shall evaluate the dwelling for the following:

a. Health and safety issues that may negatively affect occupants.

b. Building durability issues that may negatively affect or prohibit installation of energy efficiency measures.

c. Comfort issues that may cause increased energy use.

d. Cost effective energy efficiency improvements.

2.2 Energy Audit Requirements

All energy audits will include:

a. Diagnostic testing. See **Section 4, *Diagnostic Testing*** and **Exhibit 5.S3A, *Diagnostic Test Report***.

Exception: Multi-family dwellings five units and greater do not require blower door testing. Blower door testing may be beneficial in low rise (3 stories or fewer), buildings with 25 units or less, and units with doors to the outside (garden apartments).

b. Combustion safety diagnostic testing when combustion appliances are present. See **Exhibit 5.3.1B, *Combustion Safety Technical Support Document***.

c. ASHRAE 62.2 Mechanical Ventilation Worksheet. See **Exhibit 9.3, *Mechanical Ventilation Worksheet*** example.

d. Mold disclosure report. See **Exhibit 5.S1, *MOLD Assessment and Release Form*** example.

Exception: Multi-family dwellings five units and greater do not require tenant signature on the Mold Assessment and Release form unless mold conditions are identified in the unit. The owner's representative may sign off for the unit-by-unit Mold Assessment and Release and Pollution Source Survey.

e. Pollution Source Survey. See **Exhibit 5.S2, *Pollution Source Survey*** example.

f. Energy Audit Assessment (visual inspection), shall include inspecting all accessible areas and systems as follows:

1. Attics.
2. Crawlspaces.
3. Building envelope.
4. Air sealing opportunities
5. Roofs.
6. Insulation levels.
7. Heating systems.
8. Ventilation systems.
9. Interior surfaces.
10. Appliances.
11. Lighting (including common areas of multi-family dwellings)
12. Home energy bills.
13. Stairs, ramps, landings, handrails.
14. Other structural elements.
15. Plumbing and electrical where insulation may be installed.
16. Plumbing and electrical in areas where humans may come into contact.
17. Smoke alarms and CO detectors.

2.2.1 Historical preservation considerations

All energy audits shall note any historical preservation requirements and shall consider these requirements when determining the scope of work that will be used to complete weatherization work on the dwelling unit.

2.3 Review of Energy Audit with client

The Local Agency shall review the findings of the energy audit and anticipated scope of work with the occupants of the dwelling. Documentation of the audit findings and anticipated scope of work shall be retained in the client file.

Exception: Multi-family dwellings require the local agency to review the findings of the energy audit and anticipated scope of work with the dwelling owner. Local agency shall coordinate with the dwelling owner to ensure tenants are properly notified of the anticipated scope of work.

2.4 Client authorization

The Local Agency shall obtain a signature from the client (occupant of the dwelling unit), and the landlord (if it is a rental dwelling) authorizing installation of the measures to be performed on the eligible dwelling prior to work commencing. A copy of the signed authorization shall be retained in the client file.

***Exceptions*:**

a. Low-cost/No-cost measures may be installed before audit findings are reviewed with the occupants and landlord.

b. Multi-family dwellings require the local agency to obtain only the dwelling owner's signature. The local agency shall coordinate with the dwelling owner to ensure tenants are properly notified to allow access for installation of measures and necessary inspections.

2.5 Energy Audit documentation

The Local Agency shall document the results of all energy audits in the client file. This documentation shall describe the condition of the home at the time of the energy audit and justification for the measures as outlined in the scope of work.

Exception*:** If during the energy audit assessment it is determined the best course of action is to defer service as per Commerce policy **Section 5.5 *Deferral Standards, a complete energy audit is not required.

2.5.1 Photographic record

The Local Agency shall record the condition of the dwelling by taking a minimum of two (2) electronic or printed photographs of the dwelling's exterior elevation that capture the essence of the dwelling. These photographs shall be dated and retained. The location of the photographic record shall be documented in the client file.

2.6 Energy Audit tool

TREAT (Targeted Residential Energy Analysis Tools) has been adopted as the authorized energy audit tool to be used in the weatherization program. It is required for analysis of any type of measure, or dwelling unit, not specifically covered by a DOE approved priority list for the Washington State Low-Income Weatherization Program. Failure to use TREAT on measures not included in the Priority List of Weatherization Measures, or by other policy, will result in disallowed costs.

Local agencies are responsible for ensuring that all staff performing computerized energy audits acquire and maintain proficiency using TREAT.

TREAT will be used to develop a scope of work. The most cost-effective measures as determined by TREAT will be installed in descending order of cost effectiveness subject to funding availability.

Exception: A Priority List has been adopted for use on single family, small multi-family (four units or less), and mobile home conservation measures. A separate column of the priority list is approved for multi-family dwellings of five units or more AND three stories or less in height. Measures will be installed in order as shown on the approved priority list. See **Exhibit 5.1A, *Priority List of Weatherization Measures.***

2.6.1 Savings to investment ratio (SIR)

The Local Agency shall install those individual conservation measures (Wx Measures) that have a savings to investment ratio of 1.0 or greater. When using TREAT, on the "Package Wizard" screen, the individual Wx Measures and the total package of measures must each have an SIR of 1.0 or greater. Wx Measures will be installed in descending order of cost effectiveness. The cost of Weatherization Related-Repairs (incidental repairs) must be included in the cost of the package of measures installed in a dwelling. Health and Safety Measures are NOT included. Leveraged funds may be used to reduce weatherization fund source investments in order to bring the SIR to 1.0 or greater

***Exception*:** A measure with an SIR of 1 or greater can be deferred if the Local Agency does not have adequate funding to install the measure.

2.6.2 Computerized Energy Audit set-up maintenance

The Local Agency is required to maintain the most current version (including updates) of TREAT software.

Requirements for key project parameters are as follows:

a. Fuel costs: Use current costs for applicable fuel types used at the project site based on local survey.

b. Installed measure costs: The Local Agency shall calculate installed measure costs incorporating any applicable prevailing wage rates. For use in TREAT, Installed Measure Costs are verifiable material and labor costs to install Wx Measures and WRR Measures. For more detail, see *Installed Measure Costs*.

c. Daily and long term weather: Use nearest available weather station(s). Other stations may be substituted based on justification of heating degree days.

d. Air Infiltration: Will be based on blower door diagnostics.

***Exception*:** Multi-family dwellings five units and greater do not require blower door testing. Blower door testing may be beneficial in low rise (3 stories or fewer), buildings with 25 units or less, and units with doors to the outside (garden apartments). If blower door testing is not done, the TREAT default of 0.6 ACH or justified alternative will be used.

e. Thermostat Setting: Use actual verified set points and occupancy data. If actual data cannot be verified, standard occupied temperature of 70 degrees F and unoccupied temperature of 60 degrees F (includes sleep) shall be used. Standard number of occupied hours is 16 per day.

f. Number of occupants: Use actual verified occupancy data. If actual data cannot be verified, standard occupancy of 1.5 people per bedroom shall be used. For dwellings less than five units, standard occupancy may be calculated based on number of bedrooms plus one occupant.

g. Surfaces and spaces: Use actual energy audit assessment to determine structural characteristics and thermal boundaries. TREAT allows for combining surfaces or spaces based on significant common characteristics.

h. Windows and doors: Use actual project assessment to determine size, type, and location.

i. Lifespan: Use TREAT defaults.

j. Fans: Include all building mechanical airflow.

k. Base-load: Use actual verified data from the energy audit assessment, TREAT defaults, or a justified combination.

l. Billing Analysis and True Up: Import or enter the most recent energy bill data (minimum 12 months) to calibrate (true up) the TREAT model.

***Exception*:** For single family, small multi-family (four units or less), and mobile home dwellings the billing analysis TREAT true up is optional. It is strongly recommended, but not required.

Justification for any variance from these parameters shall be clearly documented in the project notes.

2.7 General Heat Waste Reduction List

The Local Agency shall utilize the state approved General Heat Waste Reduction List. All measures on this list are presumed cost effective and shall be installed as applicable to the extent funding allows. Total General Heat Waste Reduction material and labor cost must not exceed $250 (≤$250) per unit. (See page 2, **Exhibit 5.1A(2), *General Heat Waste Reduction List***).

2.8 Analysis of base load costs

The Local Agency shall analyze base load costs for each dwelling unit when fuel histories are available. Base load cost data shall be used to determine cost-effective energy conservation and energy education opportunities.

Section 3.0 Combustion Safety Testing

Specs TOC

The Local Agency shall perform a State of Washington approved combustion safety test procedure as detailed in the **Exhibit 5.3.1B, *Combustion Safety Technical Support Document*** in all dwellings that have a functioning combustion appliance.

Combustion Appliances Defined*: any liquid, gas, or solid fuel burning appliances including water heaters, wood stoves, ranges, ovens or stove tops, furnaces, boilers, space heaters, fireplaces, fireplace inserts, and gas logs.*

3.0.1 Pre weatherization combustion safety testing

The Local Agency shall perform a Combustion Safety Test for every combustion appliance prior to installing any conservation measures that alter the building shell, HVAC system, or interior configuration (including comfort air sealing or altering of interior doors) of the dwelling. An **Exhibit 5.3.1A, *Combustion Safety Test Report*** shall be filled out for each appliance and be present in the client file.

3.0.2 Post weatherization combustion safety testing

The Local Agency shall perform a Combustion Safety Test for every combustion appliance at the conclusion of the weatherization project.

3.0.3 In-progress combustion safety testing

The Local Agency, subcontractor, or technician shall perform a daily in-progress test out at the end of the work day when work has been done that alters the building shell, HVAC system, or interior configuration (including comfort air sealing, altering of interior doors) of the dwelling unit. A Carbon Monoxide detector shall be installed in the home on Day One. The **Exhibit 5.3.1A(2), *Daily In-Progress Combustion Safety Test Report*** may be used for daily in-progress testing.

After December 31, 2014 the qualified technician performing the daily test shall have one or more of the following: BPI certification, which includes combustion safety testing, Combustion Safety Testing certificate of training, or Daily In-progress Combustion Safety Testing certificate of training. If the system fails, the Local Agency or Subcontractor shall take immediate action before leaving the dwelling unit to ensure that the occupant's health and safety is not compromised.

Exception: In progress testing using “furnace heat” during extreme hot outdoor temperatures may be deferred as long as all the following conditions are documented and met:

a. Water heater is “fired up” during testing.

b. Test using the summer blower if applicable.

c. If the home has central forced air cooling it will be used in conjunction with the test.

d. The furnace is turned off and client has been informed not to use.

e. The Local Agency shall perform a final and complete Combustion Safety Test for every combustion appliance at the conclusion of the weatherization project.

3.1 Draft and spillage tests

The Local Agency shall perform spillage and draft tests for all natural and induced draft space heating systems and water heaters. Draft and spillage shall first be tested under worst-case (**Exhibit 5.3.1B, *Combustion Safety Technical Support Document page 3)*** conditions, and then repeated for natural conditions if the appliance fails under worst-case.

3.1.1 Single chimney with multiple appliances

When a chimney is shared by multiple appliances, the appliance with the smallest Btu input rating shall be tested first, and remaining appliances shall be tested in order of increasing input rate.

3.1.2 Multiple fuel sources vented into a single chimney

Multiple fuel sources vented into a single chimney are cause for deferral of services until the situation is corrected.

3.1.3 Draft testing

The Local Agency shall measure vent draft pressure at steady-state operating conditions of all heating and hot water combustion appliances.

Exceptions:

a. Sealed Combustion or Power Vented (90% +): No draft measurement required. Recommend technician confirm draft at termination. If it is unsafe to access termination point for testing due to the height of the roof or weather conditions an alternative is to access flue products by disconnecting the drain line.

b. Solid fuel-burning appliances.

c. Gas fireplace inserts.

   1. Atmospheric or Natural Draft (70%): Draft testing shall be done in the center of the longest, straightest, accessible section of the vent connector. Holes made for the purpose of measuring draft shall be drilled using 5/16th bit. Once test is complete, seal hole with High Temperature RTV silicone caulk.

Cover with aluminum tape or plug with a 3/8 inch tap bolt made of stainless steel or nylon.

2. Induced Draft (80%): Draft testing shall be done a minimum of 3 feet downstream of the inducer motor. The preferred location for CO testing is the same hole used for draft testing. Holes made for Draft and CO testing shall be drilled using a 5/16th bit. Once test is complete seal the inner liner with High Temperature RTV silicone caulk and a 3/8 inch tap bolt made of stainless steel or nylon or seal interior hole with RTV silicone and cover exterior hole with aluminum tape.

Appliances shall draft at or above (i.e. have more draft) the minimum acceptable draft level detailed in Table 1. If the draft test fails, the Local Agency shall make appropriate repairs before proceeding with weatherization services or defer the project until problem is corrected.

Table 1: Minimum Acceptable Draft Test Action Levels [1]

Outside Temperature (degree F)	Draft Pressure Standard (Pa)
<10	-2.5
10-90	(Outside temp / 40) – 2.75*
>90	-0.5

**Calculation is as follows: Divide the outside temp by 40, then subtract 2.75 from this value. The result is the minimum acceptable draft.*

3.1.4 Spillage

The Local Agency shall test for spillage on all atmospheric draft and induced draft appliances. Any appliance that continues to spill flue gases beyond the maximum established time limits identified in Table 2 fails the spillage test. If the unit fails, the test shall be done in natural conditions. The Local Agency shall make appropriate repairs or defer the project until the problem is corrected.

Induced draft heating systems shall be checked for spillage at the base of the chimney liner or flue. If a chimney is shared between an induced draft heating system and a natural draft water heater, spillage shall be checked at the water heater draft diverter.

---

[1] **Building Performance Institute** Standard

Table 2: Maximum Acceptable Appliance Spillage Periods [2]

Appliance Type	Spillage Test Period (minutes)
Water Heater, Gravity Furnace, Boiler	1.0
Space Heater	1.0
Forced Air Furnace	1.0

Exception: Wood stoves and fireplaces shall not be tested for spillage.

3.2 Heat rise

The Local Agency shall test all forced air heating systems for heat rise. If the heat rise is outside the manufacturer's acceptable range the system fails. If the heating unit fails the heat rise test, The Local Agency shall have the appropriate repairs made or defer the project until the problem is corrected.

Exception: If manufacturer's acceptable heat rise range is unavailable, the default acceptable heat rise range is greater than 40° and less than 70° Fahrenheit.

3.3 Carbon monoxide tests

The Local Agency shall perform a CO test in all combustion appliances. The Local Agency shall measure CO in the undiluted flue gasses in the flue of the appliance, using a digital gauge that measures in parts per million (ppm). For all combustion appliances, CO shall be measured at steady-state operating conditions. CO levels must be recorded and appropriate actions taken, as detailed in **Table 3: *Combustion Safety Test Action Level Table***.

a. Atmospheric or Natural Draft (70%): CO testing shall be done in the undiluted flue products at the heat exchanger cell outlets.

b. Induced Draft (80%): CO testing can be done anywhere in the vent connector or at the vent termination if the appliance is vented by itself. The preferred location for CO testing is the same hole used for draft testing. Holes made for Draft and CO testing shall be drilled using a 5/16th bit. Once test is complete seal the inner liner with High Temperature RTV silicone caulk and a 3/8 inch tap bolt made of stainless steel or nylon or seal interior hole with RTV silicone and cover exterior hole with Aluminum tape.

---

[2] **Building Performance Institute** Standard

c. Sealed Combustion or Power Vented (90% +): CO shall be tested, preferably at the termination. If it is unsafe to access termination point for testing due to the height of the roof or weather conditions an alternative is to access flue products by disconnecting the drain line.

Exception: Carbon monoxide testing of wood burning appliances flue gases is not required.

3.3.1 The Local Agency shall not drill holes in flues for power vented or sealed combustion units. CO shall be measured at the exterior outlet of the flue.

3.3.2 Gas ovens

Gas ovens CO shall be tested in accordance with the **Exhibit 5.3.1B, *Combustion Safety Technical Support Document***.

For Action Levels see **Table 3.1: *Carbon Monoxide Test Action Levels for Ovens***[3] (Line 18 in Combustion Test Report)

3.3.3 Ambient carbon monoxide

The Local Agency shall monitor ambient CO levels upon entering the combustion appliance zone and during the test period for all appliances. If ambient levels exceed 9 ppm at any time, turn off the appliance immediately and make appropriate repairs. The maximum allowable ambient CO level in a dwelling where weatherization work has been completed is 9 ppm.

3.4 Combustion appliance zone depressurization

The Local Agency shall perform a worst-case depressurization test in each combustion appliance zone. When combustion appliance zone (CAZ) depressurization limits are exceeded under worst-case conditions, the depressurization shall be brought within acceptable limits as detailed in **Table 4: *CAZ Depressurization Limits***.

Exception: If Local Agency is unable to meet CAZ Depressurization Limits or standards, the reasonable efforts attempted, the actions taken, and the education provided to the client shall be documented in the client file.

[3] **Building Performance Institute** Standard

3.5 Documentation

The Local Agency shall document in the client file repairs and the actions taken to correct all combustion safety failures.

3.6 Un-vented fuel burning space-heating appliances

The Local Agency shall not proceed with weatherization of dwellings that have existing un-vented fuel burning space-heating appliances until they are removed. The Local Agency shall notify the owners and the occupants of any hazards that exist with un-vented space heaters, and of the program requirements that un-vented space heaters be removed before weatherization services can be delivered.

3.7 Required equipment

The Local Agency shall:

a. Use a digital manometer to perform all pressure diagnostic-testing measurements.

b. Use a digital CO measurement device that is capable of measuring 1ppm to 1000 ppm.

c. Have diagnostic testing equipment calibrated and maintained as recommended by the manufacturer.

d. Keep on file a record of maintenance and calibration for all diagnostic equipment.

Section 4.0 Diagnostic Testing

Specs TOC

The Local Agency shall perform diagnostic testing on all dwelling units prior to weatherization measures being installed and upon completion of each project. An **Exhibit 5.S3, *Diagnostic Test Report*** shall be filled out and be present in the client file.

4.1 Single point blower door test

The Local Agency shall perform a single point blower door test at 50pa before any weatherization measures are installed, and at the conclusion of any project where air sealing, building shell alteration, duct sealing, insulation, or any other measure that may alter the natural or mechanical air changes of the home is performed. Results of pre- and post-weatherization blower door testing must be documented in the client file.

4.1.1 Location

The Local Agency shall install the blower door in a doorway that provides for the most accurate test. See ***Energy OutWest Weatherization Field Guide***, **Section 2.3, *Blower-door testing, Blower door test procedures***. The location of the doorway where the tests are taken shall be documented in the client file.

4.1.2 Baseline data

The Local Agency shall document baseline information, such as wind speed, temperature, etc, using a diagnostic test report. See **Exhibit 5.S3, *Diagnostic Test Report***.

4.2 Zonal pressure testing

The Local Agency shall perform zonal pressure testing in all zones (attics, crawlspaces, garages, unconditioned crawlspaces, etc) with more than 50 sq. ft. of common surface with the intended thermal boundary of the dwelling. The test shall be performed prior to the installation of weatherization measures that alter the shell of the dwelling. Zonal pressures shall be recorded with reference to (WRT) the living space of the home. Post zonal pressure testing shall be done before the installation of attic or crawlspace ventilation. Pre- and post-zonal pressure measurements shall be documented in the client file.

4.2.1 Duct system testing

The Local Agency shall perform pressure pan (or pressure block) testing of all forced air duct systems. Duct system standard for tightness is 1pa or less at each supply register. The standard for return plenums is 5pa or less. (See **Section 13.6, *Duct***

Sealing). Post testing of ducts in enclosed cavities, such as wall bays, dropped ceilings, floor joists, mobile home bellies, etc., shall be performed prior to insulating those cavities. Pre- and post-duct pressure pan measurements shall be recorded in the client file.

Exceptions:

a. Duct systems that are entirely within the heated building envelope and not connected to any exterior wall, attic or ceiling building component or buffered zone, are not required to be tested.

b. The Local Agency may use a duct tester to perform duct tightness testing. The standard for tightness is 100 cfm leakage to outside at 25pa.

c. If asbestos tape is observed inside the duct, no diagnostic testing shall be performed prior to encapsulation.

4.3 Dominant duct leak testing

The Local Agency may perform dominant duct leakage testing on all homes with ducted forced air heating distribution systems when any part of the system is located outside the thermal and pressure boundary. Dominant duct leakage testing may be performed on mobile homes. Pre- and post-dominant duct leakage measurements may be recorded in the client file. See ***Energy OutWest Weatherization Field Guide*, Section2.7*, Duct Blower Leak-Testing, Dominant duct leakage*.** Standard for dominant duct leakage is no more than 1.5pa or 100cfm of leakage to outside.

4.4 Room-to room pressure differential testing

The Local Agency shall test and record the pressure differential between rooms with supply, return, or both ducts and the main body of the dwelling. Pressure differentials of more than 5pa must be corrected. See ***Energy OutWest Weatherization Field Guide*, Section 2.7*, Duct Blower Leak-Testing, Room pressure imbalance.*** Pre- and post-pressure differential measurements shall be recorded in the client file.

4.5 Mechanical Ventilation: See Section 10, *Mechanical Ventilation*

4.6 Diagnostic testing equipment

The Local Agency shall:

a. Use a digital manometer to perform all pressure diagnostic testing measurements.

b. Have blower door(s) maintained and digital manometer(s) calibrated as recommended by the manufacturer.

c. Keep on file a record of maintenance and calibration for all diagnostic equipment.

Section 5.0 Building Envelope Air Sealing

Specs TOC

The Local Agency shall perform air sealing when it is determined by a weatherization audit to be effective based on one of the following considerations: health, safety, building durability, or cost-effectiveness.

5.0.1 Air sealing locations

Air seal the building envelope including the heating or cooling duct system, at the pressure boundary and align it with the thermal boundary.

5.0.2 Priority air sealing

Priority air sealing shall be performed, and shall include air sealing of all large holes, including obvious bypasses, chase ways, and gaps that exist between the unconditioned areas and the conditioned areas.

5.0.3 Determining cost-effectiveness

Each agency will establish a cost-effectiveness guideline. This guideline will reflect the cost to achieve a 100CFM50 reduction as a result of air sealing. Air sealing shall continue until the additional costs of air sealing cannot be justified in terms of the energy savings it will produce. A savings to investment ratio (SIR) of one or greater shall be used when determining the cost-effectiveness of air sealing. Documentation of the air sealing time and efforts must be present in the client file. After all air sealing in an attic/ceiling addressing health, safety and durability issues is complete, then air sealing should continue until it is determined that further work is not cost effective. Reference materials for establishing a cost effectiveness guideline can be found in *Residential Energy* by John Krigger, *Appendix A-12, Air Sealing Economic Limits.*

5.0.4 Use of pressure diagnostics and blower door

The Local Agency shall perform a pre- and post-retrofit blower door test on all homes. Blower-door guided air sealing shall be used to assist in determining appropriate air sealing measures. Pre- and post-blower door test results (CFM50) shall be recorded in the client file.

5.1 Preferred installation method

The preferred method for installing air sealing materials is from the attic side, not living space side, of ceilings and attics, from the inside surface of walls, and from the underside of floors.

5.1.1 Dirt and debris removal

All loose dirt and debris or other materials that might prevent the adherence of the air sealing materials to the surface shall be removed prior to installation.

5.1.2 Depth of sealant

Sealant shall be installed following the manufacturer's recommendations.

5.1.3 Filler materials

Filler materials that will adequately support the sealant, such as polyurethane foam, backer rod or other suitable materials will be installed in cracks deeper than 1/2 inch to a depth of 3/8 inch below adjacent surfaces to support the sealant when necessary.

5.2 Sealing bypasses around chimneys, flues and stovepipes

Bypasses around chimneys, flues and stovepipes shall be sealed using non-combustible materials rated for this use.

5.2.1 Fireplaces with broken or missing dampers

Installation of chimney top dampers or an inflatable draft stopping device is allowable.

5.3 Sealing non IC-rated fixtures

Non IC-rated fixtures see **Section 6.5.1, *Recessed lighting fixtures and other heat-producing fixtures***.

.

Section 6.0 Attic/Ceiling Insulation

Specs TOC

Attics/Ceilings will be insulated if the cost to insulate is justified using an evaluation of cost-effectiveness where the Savings to Investment Ratio (SIR) is 1or greater. The *State Energy Code* has established R-38 as the target level for insulating attics/ceilings.

6.0.1 Insulation material shall be installed in a uniform manner throughout the attic and cover exterior wall plates with a minimum R-7 of insulation.

6.0.2 When insulating attic/ceilings the thermal and pressure boundary shall be aligned.

6.1 Ceiling loading

The Local Agency is responsible for ensuring that the ceiling can bear the loads that will be imposed when insulation (new or additional) is installed.

6.2 Insulating floored attics

Floored over attic spaces shall be insulated to the highest R-value approaching R-38, without altering the structure.

6.3 Insulating knee walls

Knee walls adjoining attic spaces shall be insulated to a minimum of R-11, and to a maximum R-19. Insulation shall be permanently fastened. Fastening shall be in accordance with the guidelines for underfloor insulation.

6.3.1 Cavity under knee wall

The floor cavity immediately below the knee wall shall be air sealed prior to insulation.

6.3.2 Vapor barrier

Any vapor barrier that is installed shall be located on the warm side of the wall being insulated.

6.3.3 Potential human contact

Insulation installed in knee wall side attics that is subject to routine human contact shall be covered with material having a flame spread index of 25 or less and smoke developed index of not greater than 450 when tested in accordance with ASTM- E84-01, **Exhibit 5.S5, *Flame Spread and Smoke Development***.

6.4 Sloped ceilings

Sloped ceiling cavities shall be insulated using one of the following methods:

a. Dense pack the sloped ceiling area. Seal all penetrations and bypasses along slope to prevent any moisture migration. Refer to ***Energy OutWest Weatherization Field Guide*****, Section 5.4 Attic Insulation.**

b. Sloped cavities may be insulated with loose fill, batt or rigid insulation while maintaining a ventilated one (1) inch air space between the insulation and the roof sheathing. Refer to ***Energy OutWest Weatherization Field Guide*****, Section 5.4 Attic Insulation.**

6.5 Attic/Ceiling damming

Attic/ceiling damming requirements are detailed below.

6.5.1 Recessed lighting fixtures and other heat-producing fixtures

If insulation is installed, existing non IC-rated recessed lighting fixtures and other heat-producing fixtures may be replaced with air tight and Type IC-rated fixtures.

These Type IC-rated, metal recessed lighting fixtures and other heat-producing fixtures, certified by an independent laboratory as being capable of dissipating fixture heat, can be covered with insulation. These fixtures shall be marked as UL listed "Recessed fixture Type IC".

Exceptions: If replacement or retrofit of fixtures is not practical:

Non-IC rated (non air tight):

A solid, flame-resistant enclosure shall be securely attached over or around all recessed lighting fixtures or other heat-producing fixtures that are not listed for insulation cover (IC). Enclosures shall meet the following requirements:

a. Keep insulation at least three (3) inches but not more than four (4) inches from the sides of the fixture.

b. Be made from metal or sheetrock, or other material with a flame spread rating of 25 or less, in accordance with ASTM E-84.

c. Enclosure seams shall be air sealed.

d. Be securely attached to the ceiling structure to prevent their displacement during and after the installation of insulation.

e. Extend at least four (4) inches above the top of insulation. If a closed-top enclosure is impractical, an open-top enclosure can be used. There shall be one

(1) inch or more air space above and no insulation shall be installed on top of the enclosure.

f. Doorbell transformers must remain readily accessible to service. A closed-top enclosure shall not be used.

IC rated (non air tight):

IC rated fixtures may either be directly covered with insulation or be sealed within an air tight enclosure. The enclosure shall be covered with insulation.

Reference IRC 2003 NEC 70-2008 410.116.

6.5.2 Exhaust fans

Exhaust fans in attics and/or dropped ceilings are not considered heat-producing fixtures.

6.5.3 Soffits and dropped ceilings

Damming shall be installed in soffits with heat-producing, non IC-rated fixtures prior to installation of insulation. If damming cannot be installed, no insulation shall be installed in the soffit. Refer to **Section 23, *Lighting Retrofits***.

6.5.4 Vents and chimneys

If insulation is added, these conditions apply:

Any existing insulation materials or other loose combustible material shall be removed from the applicable clearance areas described in this section.

a. **Masonry Chimneys:** Any portion of a masonry chimney located in the interior of the building or within the exterior wall of the building shall have a minimum air space clearance to combustibles of 2 inches (51 mm). Existing fixed building materials need not be removed. A shield of either solid, non-combustible material or fire rated material with a flame spread of 25 or less, extending a minimum of two (2) inches above the level of loose-fill insulation shall be installed. Damming must be secured in place to prevent displacement. Batt insulation shall not require a shield but shall maintain the required clearance unless rated as non-combustible per ASTM E-136.

   Exception: Masonry chimneys equipped with a chimney lining system listed and labeled for use in chimneys in contact with combustibles in accordance with UL 1777 and installed in accordance with the manufacturer's installation instructions are permitted to have combustible material in contact with their exterior surfaces.

b. **Listed vents and factory built chimneys:** Where these items pass through insulated assemblies, an insulation shield constructed of steel having a minimum thickness of 0.0187 inch (0.4712 mm) (No. 26 gage) shall be installed to provide *clearance* between the vent and the insulation material. The *clearance* shall not be less than the *clearance* to combustibles specified by the vent manufacturer's installation instructions. Where vents pass through attic space, the shield shall terminate not less than 2 inches (51 mm) above the insulation materials and shall be secured in place to prevent displacement. Insulation shields provided as part of a *listed* vent system shall be installed in accordance with the manufacturer's installation instructions.

c. **Single wall connectors and pipe:** Where these items pass through insulated assemblies shielding shall be provided and clearances maintained according to state and local codes.

Some common clearances for residential appliances include:

APPLIANCE	MINIMUM DISTANCE FROM COMBUSTIBLE MATERIAL		
	Listed Type B gas vent material	**Listed Type L vent material**	**Single-wall metal pipe**
Listed appliances with draft hoods and appliances listed for use with Type B gas vents	As listed by manufacturer	As listed by manufacturer	6 inches
Residential boilers and furnaces with listed gas conversion burner and with draft hood	6 inches	6 inches	9 inches
Residential appliances listed for use with Type L vents	Not permitted	As listed by manufacturer	9 inches
Unlisted residential appliances with draft hood	Not permitted	6 inches	9 inches
Residential appliances other than above	Not permitted	9 inches	18 inches

6.5.5 Mechanical equipment

Furnaces or water heaters located in attics shall be surrounded by a retaining wall that extends at least four (4) inches above the level of surrounding insulation. The retaining wall shall maintain clearances specified by the mechanical equipment's manufacturer.

6.5.6 Mechanical equipment access

When HVAC or other mechanical equipment is located in an attic, access shall be provided to allow for equipment maintenance and repairs. The access shall be at least 14.5 inches by 24 inches, and should be as close to the HVAC equipment as possible. The pathway from the access hatch to any attic HVAC equipment shall be insulated with batts, rather than loose fill insulation.

6.6 Exhaust ducting in attics/ceilings

Refer to **Section 10, *Mechanical Ventilation***.

6.7 Heating and cooling ducting in attics/ceilings

Refer to **Section 13, *Heating and Cooling Ducts***.

6.8 Knob and tube wiring in ceilings/attics

Insulation may be installed over knob and tube wiring found in attics or ceilings when the following procedures are followed.

6.8.1 Inspection

The wiring shall be surveyed by a licensed electrical contractor who shall certify in writing that the wiring is in good condition with no evidence of improper overcurrent protection, conductor insulation failure or deterioration, and with no improper connections or splices. Repairs, alterations or extensions of or to the electrical system shall be inspected by an electrical inspector as defined in *WAC 296-46B-394 Wiring methods and materials -- Concealed knob-and-tube wiring* (**http://apps.leg.wa.gov/WAC/default.aspx?cite=296-46B-394**). A copy of the electrician's certification shall be present in the client file.

6.8.2 Overcurrent protection

All knob and tube wiring that is to be covered with insulation shall have overcurrent protection in compliance with the *National Electrical Code, Table 310-16, 60℃ column*. Overcurrent protection shall be either circuit breakers or Type S fuses. Type S fuse adaptors shall not accept a fuse of an ampacity greater than is permitted in the above-referenced National Electric Code.

6.8.3 Insulation

After inspection and any subsequent repairs and corrections are made, or over current protection installed, fiberglass or cellulose insulation may be installed. Loose or rolled thermal insulating materials may be installed over knob and tube wiring as long as the insulation meets the National Fire Protection Association (NFPA) 101 Life Safety Code, as identified with a flame spread factor of 25 or less as tested using *ASTM E-84*. See **Exhibit 5.S5, *ASTM E 84, Flame Spread and Smoke Development***. Foam insulation is not allowed for use with knob and tube wiring. If repairs or overcurrent protection are not made or provided, then no insulation shall be installed in contact with the knob and tube wiring, and the owner of the building will be notified in writing of the areas needing repair, or circuits needing overcurrent protection.

6.9 Wiring (other than knob and tube)

Insulation may be installed over wiring (other than knob and tube wiring) found in attics or ceilings when the following procedures are followed.

6.9.1 Wiring

All visible wiring shall be inspected by the Local Agency to ensure that the covering is intact and that there is no non-conforming wiring, such as extension cords, speaker wiring, automotive wiring, etc. or wiring less than 14 gauge, that is integrated into the house electrical system in the attic.

6.9.2 Splices and connections

All splices and connections shall be in UL approved junction boxes that have covers that are attached with screws.

6.10 Attic access

Access shall be provided into attic spaces wherever it is practical for a person to reasonably work. Access shall be from the dwelling interior. Attic access covers and doors from conditioned to unconditioned spaces (attics and crawlspaces) shall be tight fitting or weatherstripped to prevent air leakage. All installed attic access shall be easily movable, such as on hinges or screwed. No nails can be used to secure attic access covers.

***Exception*:** If no interior access is practical, access shall be provided through the exterior of the dwelling. Exterior access shall be sized to allow for entry into the attic. All installed attic access shall be easily movable, such as on hinges or screwed. Nails shall not be used to secure attic access covers.

6.10.1 Framing access openings

Attic entry access shall be framed to prevent loose-fill insulation from falling or sloughing through the opening. If interior access is to be installed, it shall have an opening of least 14.5 inches by 24 inches, and be installed in a workmanlike manner. In all cases, a rigid dam around the opening shall extend at least four (4) inches above the level of the insulation.

Exception: When the access is located in an area where a rigid dam is not practical, fiberglass batts surrounding the opening and extending back from the opening a minimum of 16” can be used.

6.10.2 Knee-wall access openings

If attic access is provided through a kneewall, the access shall be at least 14.5 inches by 24 inches and be insulated to R-11. All installed knee-wall access shall be easily movable, such as on hinges or screwed. No nails can be used to secure knee-wall access covers.

6.10.3 Insulating access openings

Attic access covers shall be insulated to the same level as the surrounding area.

6.11 Retractable ladders

Attic access doors that incorporate retractable ladders or similar devices shall be insulated to at least R-28 by installing an insulating cover over the opening of the attic. This cover shall be designed and installed in a fashion that will allow it to be easily removed and reinstalled by the homeowner when the attic access is used.

6.12 Passive ventilation

Installation of ventilation is allowable. The installation of additional ventilation is not required. If ventilation is installed, the code minimum shall not be exceeded.

6.12.1 Roof top vent locations

Roof top vents (i.e., roof jacks) shall not be installed in the lower portion of a roof. Roof top vents installed on cedar shake roofs shall be of a type designed for that purpose.

6.12.2 Ventilation baffling

Baffling shall be installed for those eave/soffit vents that are necessary to meet minimum ventilation requirements. Baffling shall be installed in a fashion that will permanently maintain the airflow from the vent. Baffling shall be installed in a fashion that allows the maximum amount of insulation to be installed over the top plates of outside walls. Baffling shall extend a minimum of four (4) inches vertically above the level of insulation shall be inset stapled, or otherwise shall be permanently affixed.

6.12.3 Vent screening

Existing vents which are not screened shall be covered with non-corroding wire mesh with openings of one-eighth (1/8) inch.

6.13 Certificate of insulation

A certificate of insulation will be completed and posted as per **Section 1, *General Requirements***.

Section 7.0 Wall Insulation

Specs TOC

Walls shall be insulated if the cost to insulate is justified using an evaluation of cost-effectiveness where the Savings to Investment Ratio (SIR) is 1 or greater.

***Exceptions*:** If any of the following conditions exist, then the wall cavity should not be insulated:

a. Knob and tube wiring: Wall cavities that contain knob and tube wiring that cannot be certified.

b. Insulated cavity: Cavities that are fully insulated.

c. Cavities containing ducts/heaters: Any part of the cavity that is used as, or contains, an HVAC duct, contains a gas wall furnace, or contains an electric wall heater or other heat-producing device.

d. Uninsulated soffit next to cavity: Cavity is open to an uninsulated soffit with a recessed light fixture or other heat-producing device that cannot be properly dammed.

e. Cavities next to fireplace or chimney: Cavity is next to a masonry fireplace or chimney with less than three-inch clearance between cellulose and masonry.

f. Cavity next to pocket door: Wall cavity is connected to an unprotected pocket door cavity.

g. Repairs needed: Interior or exterior repair is needed and will not be performed as part of the weatherization package of the dwelling, water leaks are present, or substandard interior or exterior sheathing is present.

h. Solid walls: Walls are solid masonry, concrete, concrete block, wood, or adobe.

7.1 Timing of wall insulation

Wall insulation shall be installed after the following activities have taken place:

a. Knob and tube wiring inspection.

b. Minor electrical repairs in walls done by weatherization program.

c. Required damming and/or blocking is installed.

7.2 Dense pack wall insulation

All closed wall cavities that can be insulated shall be insulated a loose fill insulation product designed specifically for dense pack applications. Cellulose insulation used in

an enclosed cavity shall be installed at 3.5 pounds per cubic foot or greater density. Blown fiber glass, mineral fiber, rock and slag wool, or spray foam used in an enclosed cavity shall be installed at or above the manufacturer's recommended density to limit airflow that corresponds to an air permeance value of ≤ 3.5 cfm/sq ft at 50 Pascals, as measured using BPI-102 "Standard for Air Resistance of Thermal Insulation Used in Retrofit Cavity Applications – Material Specification" or ASTM C 522, E 283 or E 2178.

***Exceptions*:**

a. If the home's pre-insulation cfm50 shows high building tightness, the wall cavities do not have to be insulated using the dense pack method.

b. On a project-by-project basis, products other than cellulose may be used, with reasons documented in client file.

c. Or if one or more sides of the wall cavity are formed by concrete or masonry, the wall cavities do not have to be insulated using the dense pack method.

7.2.1 Fill tube method

Insulation will be installed using the fill-tube method.

7.2.2 Interior/exterior installation

Contractors shall get a signed authorization prior to drilling from the homeowner or landlord allowing the contractor to drill holes in the home. Dense pack insulation may be installed from the exterior or interior.

7.2.3 Water column (WC) pressure

Insulation blowing machines shall be tested and perform at a minimum of 80 inches WC on the date of installation. This measurement shall be recorded on the certificate of insulation.

7.2.4 Balloon-framed walls

Walls that do not have a top and/or bottom plate (balloon-framed) shall have stops installed in the top and/or bottom of the cavity before insulating. The stops shall be installed in a manner that will withstand dense-pack insulation installation.

7.3 Treatment of interior and exterior surfaces

The following procedures should be followed when treating exterior or interior surfaces for insulation purposes.

7.3.1 Asbestos

Exterior and interior siding shall be inspected prior to any work. Siding that may contain asbestos shall be deferred, presumed to contain asbestos, or tested and, if either presumed to contain asbestos or tested and found to contain asbestos, shall not be disturbed unless work is performed by a trained and licensed asbestos professional.

7.3.2 Lead based paint

Exterior and interior siding shall be inspected prior to any work. Siding surfaces that may be coated with lead-based paint shall be tested, or presumed to be coated with lead-based paint. Work shall follow procedures in **Section 9.8, *Lead-Based Paint***.

7.3.3 Removing exterior siding

Exterior siding shall be removed or lifted to gain access to the exterior wall for drilling. Siding shall be replaced after insulation is installed. Any siding that is damaged shall be repaired or replaced with matching siding that is primed and painted to match existing siding.

7.3.4 Drilling exterior siding

Exterior siding not containing asbestos that cannot be removed or lifted before drilling walls may be drilled through with the owner's permission. Holes shall be drilled in a level line, and all holes will be filled with a tight-fitting, wooden plug that is installed using an exterior grade, non-silicone-based adhesive, and then filled and smoothed with exterior-grade spackle, textured to match existing surface(s), allowed to cure per manufacturer's specifications, primed, and painted to match existing siding.

7.4 Open wall cavities

The following procedures shall be followed when insulating open wall cavities.

7.4.1 Insulating open cavities

Batt insulation shall be tight fitting, but not compressed. Insulation installed on the interior of home shall be covered with a fire-rated material having a flame spread index of 25 or less and smoke developed index of not greater than 450 when tested in accordance with ASTM – E84-01. See **Exhibit 5.S5, *ASTM E 84, Flame Spread and Smoke Development***.

7.4.2 Fire rating

All exposed faces and edges of insulation that are combustible shall be covered with a non-combustible material with a fire rating of not less than 15 minutes, as tested in

accordance with ASTM E-84-01. **Exhibit 5.S5, *ASTM E 84, Flame Spread and Smoke Development***.

7.4.3 Open garage walls

When wall insulation is installed in open wall cavities the insulation shall have a covering with a flame spread index of 25 or less and smoke developed index of not greater than 450 when tested in accordance with ASTM - E84-01. If the insulation does not meet this standard, a covering may be applied that does meet the standard.

7.5 Cavities containing chimney/flue

A cavity containing a metal chimney or flue without a solid barrier and a three-inch clearance zone shall not be blown with insulation.

7.6 Certificate of insulation

A certificate of insulation will be completed and posted as per **Section 1, *General Requirements***.

Section 8.0 Crawlspace /Underfloor/Perimeter Insulation

Specs TOC

Floors over unconditioned crawlspaces and basements shall be insulated if the cost to insulate is justified using an evaluation of cost-effectiveness where the Savings to Investment Ratio (SIR) is 1.0 or greater.

Exceptions:

a. Work in areas with less than 18-inch clearance may be waived.

b. Floor contains knob and tube wiring that cannot be certified safe by a licensed electrician or inspector as defined in RCW 19.28.070.

c. There is sewage waste on the ground, or any other condition is present that poses a health or safety hazard that cannot be corrected with available repair funds.

d. The sub-floor, floor or structural members are wet, rotten or unsound and the problem cannot be corrected with available repair funds.

e. Insect or rodent infestation is present that cannot be eliminated prior to insulating.

f. Extensive debris or household goods or personal belongings are present.

8.0.1 Insulation levels

Insulation shall fill the cavity and have an SIR of 1.0 or greater.

8.0.2 Installation standard

Insulation shall be installed as follows:

a. Be in substantial contact with the sub-floor with no voids or gaps.

b. Insulation batts shall not be compressed more than 10% of rated thickness.

c. Insulation shall be cut to fit each joist space.

d. All ends shall fit tight without overlapping.

e. Insulation shall fit tight against structural members, rim joist, foundation walls and pipes.

8.0.3 Insulation in area of routine human contact

Underfloor insulation installed over an unconditioned basement or crawlspace subject to routine human contact shall be covered with material having a flame spread index of 25 or less and smoke developed index of not greater than 450 when tested in

accordance with ASTM- E84-01. See **Exhibit 5.S5, *ASTM E 84, Flame Spread and Smoke Development***.

8.1 Ducts in crawlspaces

Ducts in crawlspaces shall be treated in accordance with **Section 13, *Heating and Cooling Ducting***.

8.2 Insulation support systems

The floor support matrix shall be used to determine insulation support systems.

FLOOR SUPPORT MATRIX						
Floor Type	**Support Material**	**Material requirements**	**Maximum Spacing**	**Acceptable patterns**	**Minimum fastener type**	**Minimum fastener depth**
Joist up to 24"	Lath	3/8X1.5"	20"O.C.	Across floor joists	Corrosion resistant 3/8"crown 18AWG	5/8"
Joist up to 24"	Twine	150 LBS. polyester, polypropylene or nylon	12" O.C.	Shoelace/Zigzag (must be stapled at each joist	Corrosion resistant 3/8"crown 18AWG	5/8"
Post &Beam over 32" O.C.	Lath	3/8X1.5"	20" O.C.	Across floor beams up to 54". If over 54" need center support	Corrosion resistant 3/8"crown 18AWG	5/8"
Post &Beam over 32" O.C	Twine	150 LBS. polyester, polypropylene or nylon	12"	Shoelace up to 54" across. If over 54" need center support	Corrosion resistant 3/8"crown 18AWG	5/8"

8.2.1 Lath Method

The lath used shall be dry, a minimum 1/4” thick, and not damaged. The lath shall be sized and spaced so insulation does not sag. The exterior row of lath shall be no more than 4” from the foundation wall and 20” on center in the field. Lath or other approved support mechanism shall be provided within 4 inches of the end of any batt.

The wood lath shall be fastened to the bottom of beams or joists using galvanized roofing nails which allow 5/8-inch penetration of the joist, or zinc coated, stainless steel or similar corrosion resistant staples with a minimum 3/8" inch crown and 5/8 penetration of the joist.

8.2.2 Twine method

Materials used for the twine method shall meet the following conditions:

a. Twine must be polyester, polypropylene, or nylon and have a breaking strength of at least 150 pounds.

b. Twine shall be installed in a joist-to-joist shoelace or zigzag pattern across each joist space with anchor points no more than 12 inches apart. Anchor points may not be placed in the joist/beam closer than 4 inches to the underside floor surface.

c. Nails used as anchors shall be hot-dipped, galvanized metal, or have similar corrosion resistance, and penetrate the beam/joist at least 5/8-inch.

d. Staples used as anchors shall be made of stainless steel or equivalent material of similar corrosion resistance (such as galvanized metal, nickel, solid bronze, or aluminum). Staples must be a minimum of 18 gauge, penetrate the joist a minimum of 5/8 inch, have at least a 3/8 inch crown width, and be made in a divergent point or modified divergent point style.

e. Shall be anchored to parallel joists or beams spaced up to 52 inches apart.

8.2.3 Wire hanger method

The use of wire hangers or “tiger teeth” shall not be considered an acceptable method of support for underfloor insulation.

8.2.4 Alternative insulation and methods of support for underfloor insulation

Other insulation or support methods may be acceptable. They shall be installed according to the manufacturer's recommendations and meet the SIR of 1.0 or greater. The Local Agency shall notify Commerce field monitor prior to installation.

8.3 Ground cover

Ground cover moisture barrier shall be installed in accordance with the following:

a. Shall be installed in a crawlspace when no ground cover exists or when an existing ground cover has been extensively damaged.

b. All wood or other cellulose fiber-based debris, where practical, shall be removed before new ground cover is put in place.

c. The ground cover shall be 6 mil black polyethylene, or its equivalent in perm-rating, strength, and resistance to soil-chemical degradation.

d. All joints shall be lapped a minimum of 12 inches.

e. The poly cover shall extend at least 6 inches up the foundation wall or pier blocks, but shall not contact any wood members.

f. New ground cover may be installed over existing ground cover that is deteriorated or incomplete.

g. When existing ground cover is clear it must be covered with black.

***Exception*:** When underfloor insulation is installed over an unconditioned basement and the basement has no exposed soil (has a concrete floor and walls), ground cover is not required.

8.4 Crawlspace access

All crawlspaces shall have an access. The minimum access opening size shall be 18 x 24 inches.

***Exception*:** Smaller access is allowable when dictated by existing framing.

8.4.1 Exterior access

Exterior access to the crawlspace shall have a cover or door that fills the opening, is tight fitting, and can be securely attached using hand-operable mechanical fasteners. Hand tightening fasteners, butterfly clips, or screws are acceptable. Nails shall not be used to secure access covers to framing. Cover and framing material exposed to weather, or in contact with soil or concrete, shall be pressure treated or cedar. Other types of wood may be used if they are primed and painted with exterior grade paint. Nails, screws, fasteners or other hardware used shall be made of galvanized metal, stainless steel, or similar corrosion resistant material.

***Recommendation**:* Cover crawlspace access wells with a shed roof type cover where bulk moisture is an issue. Construct the cover to conform to well dimensions. Include appropriate roofing material, prime or paint, or use treated plywood. Install handles for ease of removal. Do not install vents.

8.4.2 Interior access

Interior access to the crawlspace shall have a cover or door that fills the opening and is reasonably tight fitting. Horizontal access covers shall provide structural support equivalent to that of ¾ inch plywood. Access covers adjacent to a conditioned space shall be insulated to a minimum of R-19 for horizontal openings and to a minimum of R-11 for vertical openings. The insulation shall be permanently attached to access covers. Interior access covers shall be weatherstripped.

8.5 Installation of passive ventilation

Installation of passive ventilation is allowable. The installation of additional ventilation is not required. If ventilation is installed, the code minimum shall not be exceeded.

8.5.1 Closeable vents

Closeable vents are allowable.

8.5.2 Vent opening location

New vent openings shall not be located within 12 inches of existing water pipes.

8.5.3 Vent screening and framing

All new and existing vents shall be screened with ¼ inch corrosion resistant wire mesh, secured on all four sides, and trimmed so that no exposed edges of the wire mesh are showing from the outside. Expanded metal covers may be used. Wood framing in contact with concrete or ground shall be pressure treated or cedar.

8.6 Sealed crawlspace

Converting a crawlspace with ventilation openings to a sealed crawlspace or "unvented crawlspace" is not allowed.

Exception: Prior to beginning work a local agency must provide Commerce with evidence this alteration meets all of the following:

a. Allowed by the local authority having jurisdiction (ie building department),

b. Meets all applicable codes, and

c. SIR of 1 or greater, other than allowable Health and Safety components.

8.6.1 Combustion appliances in sealed crawlspaces

Combustion appliances shall not be located in sealed crawlspaces.

Exception: Direct vent, sealed combustion appliances with powered exhaust may be located in a sealed crawlspace.

8.7 Crawlspace/unconditioned basement combination

Treat the entire area as a crawlspace and insulate according to relevant specifications.

8.8 Crawlspace/conditioned basement combination

Construct a permanent wall dividing the two areas. Treat each area according to relevant specifications.

8.9 Rim joist area

Rim Joist areas shall be air sealed and insulated to R-19 or the highest level practical.

8.10 Exterior perimeter insulation

When exterior perimeter insulation is installed the Local Agency or Subcontractor shall follow the specifications detailed below. Also see **Section 8.6, *Sealed Crawlspaces*.**

8.10.1 Minimum R-Value for walls

Insulation installed shall have a minimum thermal resistance of R-10.

8.10.2 Insulation installation

Insulation shall be installed from the bottom edge of the siding to a depth equal to the local "frost line" (as determined from local building or water utility officials) or two feet below grade, whichever is greater.

***Exception*:** Insulation shall not be installed, nor excavation take place, below the level of any foundation footing.

8.10.3 Excavation in preparation for insulation

Prior to any excavation, the Local Agency or Subcontractor shall reach an agreement with the client regarding protection or removal and replacement of any plants or other items which will be disturbed and damaged by the excavation. Any required excavations shall be promptly backfilled after work is completed, and all plants or other items replaced in their original locations, unless released, in writing, from this obligation by the client.

8.10.4 Utility locating

The Contractor/installer shall be responsible to locate, protect, and if damaged, repair any underground cables, pipes, utility lines or other obstructions during excavation.

8.10.5 Surface preparation and attachment of insulation

The foundation surface shall be cleaned and prepared in accordance with the insulation manufacturer's recommendation. Insulation shall be attached to the foundation according to manufacturer's specifications.

8.10.6 Protection and flashing of insulation

Insulation material shall be protected and flashed to prevent water intrusion, rated for ground contact where required, and be acceptable to the owner. Above grade, the insulation shall be covered with a suitable coating that matches adjacent walls (or previous foundation surface) in color and general surface appearance.

8.11 Interior perimeter insulation

When interior perimeter insulation is installed the Contractor/Installer shall follow the specifications as detailed below. Also see **Section 8.6, *Sealed Crawlspaces*.**

8.11.1 Minimum R-Value

Insulation installed in existing unvented crawlspaces shall fill existing cavity or have a minimum thermal resistance of R-10. Building alterations, including converted a vented crawlspace into an unvented crawlspace, must meet requirements of section 8.6 Sealed Crawlspaces and be insulated to R 21.

8.11.2 Insulation installation

Insulation must extend from the bottom surface of the subfloor to the top of the below-grade floor/ground and be installed to all manufacturer's specifications.

8.12 Cantilevered floors

Cantilevered floors shall be insulated using one of the following methods.

8.12.1 Insulate cantilever open through rim

When the floor joists extend beyond the foundation wall and the rim area is open, extend the insulation batt into the cantilevered area from the crawlspace. The thickness of the batt insulation shall be thick enough to satisfy the requirement that insulation be in substantial contact with the underfloor. Air seal penetrations through sheathing or sub floor.

8.12.2 Insulate cantilever open under floor

Installer/Contractor shall install insulation batt that is the full thickness of the floor joist from the exterior. A cover of 3/8 inch exterior grade sheathing or similar material shall protect the insulation installed. If subjected to intermittent moisture (i.e. splashback, etc.), wood sheathing shall be primed on all exposed sides or pressure treated plywood used. Air seal penetrations through sheathing or sub floor.

8.12.3 Insulate cantilever no access

Installer/Contractor shall drill through existing interior or exterior cover, blow insulation into all joist cavities until full, plug holes using plugs and glue recommended for the surfaces being glued. Fiberglass insulation shall be blown at a density of 1.5 pounds per cubic foot and cellulose insulation shall be blown at a density of 3.5 pounds per cubic foot. Air seal penetrations through sheathing or sub floor.

8.13 Floor over attached garage no access

Installer/Contractor shall drill through existing interior or exterior cover, blow insulation into all joist cavities until full, plug holes using plugs and glue recommended for the surfaces being glued. Cellulose insulation shall be blown at a density of 3.5 pounds per cubic foot. If the ceiling being drilled for access is drywall or plaster, the holes shall be plugged and skim coated with joint compound ready for light sand.

8.13.1 Floor over attached garage open joists

Underfloor insulation installed in open floor joists over a garage shall be covered with material having a flame spread index of 25 or less, and a smoke developed index of not greater than 450 when tested in accordance with ASTM- E84-01**.**
See **Exhibit 5.S5, *ASTM E 84, Flame Spread and Smoke Development***.

Section 9.0 Moisture Control

Specs TOC

The Local Agency shall identify and document in the client file problems in the dwelling unit resulting from high moisture levels. The cause or source of the high moisture levels shall be alleviated prior to the completion of weatherization services. Where remediation cannot be accomplished with available funds, weatherization services shall be deferred until the cause or source of the problem(s) has been alleviated. Refer to Commerce policy **Chapter 5, Providing Weatherization Services; Section 5.5 *deferral standards***. See also **Exhibit 5.5A, *Weatherization Deferral Form example***.

9.1 Plumbing

Prior to completion of weatherization services the Local Agency or Property Owner shall repair any plumbing leak found to be wetting insulation and/or floor, wall, or ceiling components of the dwelling.

9.2 Roof

The Local Agency shall inspect the roof, flashing details, and penetrations for indications of leaks prior to insulating. Attics or ceiling cavities may be insulated when, in the judgment of the Local Agency, the roof in its current or repaired condition following a weatherization repair is expected to last, without leaking, a minimum of 5 years. Attics covered by roofs that do not meet this standard shall not be insulated. Refer to **Section 6, *Attic/Ceiling Insulation***.

9.3 Inside surfaces of roof framing/sheathing

The Local Agency shall inspect the inside surfaces of the roof framing and sheathing for indicators such as mold, rot, water damage, condensation, etc., that pose heat loss, indoor air quality, health, safety and/or durability problems. If these problems exist the cause of the problem shall be corrected before completion of weatherization.

9.4 Gutters, downspouts and runners

If necessary to prevent rainwater from entering the crawlspace or basement, missing or faulty gutter or downspout components shall be repaired or installed.

9.5 Below grade vents and penetrations in foundation walls

When crawlspace vents and other penetrations are found to be installed below grade they shall be inspected to determine whether water from outside is entering the crawlspace through the vents or penetrations. The Local Agency shall eliminate the path of water into crawlspace through the vents or penetrations.

9.6 Ground cover

All crawlspaces shall have ground cover installed as outlined in **Section 8.3, *Ground Cover***.

9.7 Sump pumps

A sump pump may be repaired or replaced to prevent water from accumulating under a dwelling.

9.8 Mechanical crawlspace ventilation

In crawlspaces with seasonal standing water an exhaust fan may be installed provided that the specifications for a sealed crawlspace detailed in **Section 8.6, *Sealed Crawlspace*** are met.

9.9 Source specific ventilation

A working exhaust fan shall be present in:

a. Kitchens with gas combustion appliances. Refer to **Section 10, *Mechanical Ventilation***.

b. Any bathroom having a working shower or bathtub. Refer to **Section 10, *Mechanical Ventilation***.

Exceptions:

a. Bath exhaust may not be required where occupancy and usage patterns indicate infrequent use and there is no evidence of moisture problems. The reason for not installing a fan must be documented in the client file.

b. Bath exhaust may not be required when whole building ventilation is functioning as designed.

9.10 Whole building ventilation

A whole building ventilation system may be installed to alleviate high moisture conditions. Refer to **Section 10, *Mechanical Ventilation***.

9.11 Dehumidifiers

A dehumidifier may be replaced, repaired or installed to prevent water damage to a dwelling unit having persistent and unresolved high moisture levels. The installation shall comply with specifications detailed in **Section 11, *Dehumidifiers***.

9.12 Client controlled conditions

The Local Agency shall inform the client of any observed client controlled conditions contributing to high moisture levels in the dwelling. The Local Agency shall document in the client file those recommendations that would help lower moisture levels.

9.13 Mold

The Local Agency shall follow Department of Energy and Commerce mold guidelines for all weatherization projects.

See **Section 9.6, *Biologicals and Unsanitary Conditions, Including Mold and Moisture*.**

Section 10.0 Mechanical Ventilation

Specs TOC

The Local Agency shall comply with ASHRAE Standard 62.2 – 2013 including Appendix A Existing Buildings to provide mechanical ventilation to alleviate excess moisture and the buildup of indoor pollutants for single family dwellings and small multi-family 3 stories and less.

10.0.1 Mechanical Ventilation Worksheet

The Local Agency shall ensure completion of Mechanical Ventilation worksheet, pre- and post-weatherization, that documents compliance with ***ASHRAE Standard 62.2 – 2013*** *Ventilation and Acceptable Indoor Air Quality in Low-Rise Buildings (Appendix A Existing Buildings)*. See **Exhibit 9.3, *Mechanical Ventilation Worksheet*** example.

10.0.2 Pollution source survey

The local agency shall complete a pollution source survey for all households and refer to it when determining ventilation strategy. Conditions requiring higher ventilation rates than indicated by ASHRAE 62.2 shall be documented in the client file. Refer to **Section 2.2, *Energy Audit Requirements***. A sample pollution source survey that local agencies may use or customize can be found in **Exhibit 5.S2, *Pollution Source Survey Example***.

10.0.3 Ventilation system testing

a. All performance test results shall be documented on the Mechanical Ventilation Worksheet and placed in the client file.

b. All existing and accessible exhaust, supply, and combination systems shall be performance tested. Testing shall be performed with a flow hood, flow grid, exhaust fan flow meter, or other air flow measuring device used in conjunction with a digital manometer.

Exceptions:

1. When performance testing of the kitchen hood is not practical or possible, one of the following methods may be used to estimate flow:

   (a) The airflow rating at a pressure of 0.25 inch wc (62.5 Pa) may be used, provided the duct sizing meets the prescriptive requirements of ASHRAE Standard 62.2 Table 5.3. If airflow ratings for the existing equipment are available at 0.1 inches wc (25 Pa) but not at 0.25 inch wc (62.5 Pa), those values may be used, provided they are reduced by 25%.

   (b) Use the Air Leakage Chart on Exhibit 5.S3A in conjunction with blower door measurement, (Tooley chart), or

2. Clothes dryer fans are not required to be tested.

c. Newly installed or modified ventilation systems shall be performance tested. (10.0.3 Exceptions, listed above, still apply.) At completion of Wx work, all mechanical ventilation rates shall be set (adjusted) for run time and CFM to achieve minimum ACH required by ASHRAE 62.2.

10.1 [Deleted]

10.2 Mechanical Ventilation Ducting

All mechanical ventilation fan exhaust ducting (whole building and local) shall comply with the following:

a. Extend directly to the outside of the structure (preferably through a vertical surface, rather than through the roof).

b. All exhaust fans shall be equipped with a back draft damper located at either the fan outlet or the vent termination.

Exception: Exhaust fans designed and wired to operate continuously do not require a damper.

c. Terminal elements for exhaust fan elements shall be screened (minimum opening size ¼"; maximum ½") or otherwise protected from entry by leaves, pests, or other materials.

d. Duct shall connect to a collar of the termination cap. Collar shall pass through the building envelope.

e. Entire duct system, including termination cap shall have at least the equivalent net free area of the fan outlet.

f. Ducting shall be constructed of rigid vent pipe material. Kitchen range hood ducts shall have a smooth interior surface and shall be constructed of galvanized metal, copper, or stainless steel.

***Exception (<u>does NOT apply to kitchen range hood exhaust fan ducting</u>)*:** Where rigid vent pipe is impracticable, flex duct may be used for runs no longer than 6 feet from fan to vent cap. For runs longer than 6 feet, flex duct may be used if the duct diameter is increased an additional 50% from the fan outlet diameter. In no installation shall the flex duct be allowed to loop. If one is running flex duct across varying heights (such as ceiling joists), the flex duct shall be stretched and secured to a splint to avoid sagging and the collection of condensation.

g. Insulated to minimum R-4 (R-11 with unfaced fiberglass insulation) if it passes through unconditioned space.

h. Air-tight and mechanically fastened at each joint using a minimum of 2 screws, and taped using aluminum butyl tape, to the fan outlet and to the collar of

termination cap. For metal ducting, the insert end of the duct shall extend into the adjoining duct or fitting in the direction of airflow.

i. Supported using nylon, plastic, or metal strapping with a minimum width of ½ inch (range hood ducting must be supported with metal strapping). Support strapping or hangers shall not compress the insulation. Support strapping or hangers shall be installed within 1 foot of a joint or connection and a minimum of every 4 feet thereafter, or per manufacturer's specifications.

10.3 Whole building (house) mechanical ventilation required

Whole building mechanical ventilation is required to comply with ASHRAE Standard 62.2 including Appendix A – Existing Buildings.

10.3.1 Whole building ventilation system types

A mechanical exhaust system, supply system, or combination thereof shall be installed for each dwelling unit to provide whole building ventilation.

a. The whole building ventilation system shall consist of one or more supply or exhaust fans and associated ducts and controls.

b. Local exhaust fans shall be permitted to be part of a mechanical exhaust system.

c. Outdoor air ducts connected to the return side of an air handler shall be permitted as supply ventilation if manufacturer's requirements for return air temperature are met.

10.3.2 Whole building fan requirements

a. **Existing fans:**
Existing fans providing whole building ventilation (in part or in whole) are exempt from any sone rating (ASHRAE Standard 62.2, Appendix A, Section 4.1).

b. **Newly installed fans:**
Fans installed to provide whole building ventilation shall have a sound rating of 1.0 sones or less as determined by the Home Ventilation Institute (**www.hvi.org/**)

***Exception*:** Air handlers, HRV/ERVs, inline fans and remote mounted fans are exempt from sound rating requirements if mounted a minimum of 4 feet from grill.

10.3.3 Control of whole building mechanical ventilation

a. The ventilation system shall have an override control which is appropriately labeled and readily accessible to the occupant. It may be integrated in a labeled wall mounted control or in the air moving device that requires the removal of the cover plate or grill. It may be a labeled breaker.

10.4 Local exhaust in kitchens

A working exhaust fan shall be present in kitchens where a gas combustion range, cook top, or oven is present.

10.4.1 Ventilation level

A kitchen exhaust fan installed by the Local Agency shall be Heating Ventilation Institute (**www.hvi.org/**) rated to deliver a minimum of 100 cfm intermittent at 0.25 inches water gauge or 5 air changes per hour continuous. Kitchen exhaust fans shall be rated for sound at a maximum of 3.0 sones, unless their maximum rated airflow exceeds 400 cfm. When existing equipment does not meet this requirement the whole building ventilation rate may be adjusted to overcome the deficit.

10.4.2 Fan rating

Exhaust fans installed directly over a range or oven must be rated for installation in this location.

10.4.3 Kitchen fan control

Kitchen fans shall be controlled by the manufacturer's switch or a wall mounted switch.

10.5 Local exhaust in bathrooms

A bathroom exhaust fan installed by the Local Agency shall be rated to deliver a minimum of 50 cfm intermittent at 0.25 inches water gauge or 20 cfm continuous. When existing equipment does not meet this requirement the whole building ventilation rate may be adjusted to overcome the deficit

10.5.1 Sound rating

Exhaust fans installed by local agency:

a. Intermittent: 3.0 sones or less

b. Continuous: 1.0 sone or less

10.5.2 Energy use

Exhaust fans installed to provide local bathroom exhaust shall have an operating watt draw of 50 watts or less.

10.5.3 Bathroom fan control

Control devices including but not limited to, the following are permissible provided they do not impede occupant control: switches, shut off timers, occupancy sensors, combined switching, and IAQ sensors.

10.6 Crawlspace and garage ventilation

Exhaust fans may be installed for operation in crawlspaces or garages to exhaust pollutants and maintain a pressure boundary relative to the dwelling unit. Fans installed shall be rated for continuous use. Ventilation flows shall not be included in the ASHRAE 62.2 Mechanical ventilation calculation. Ducts in the garage and ducts penetrating the walls or ceilings separating the dwelling from the garage shall be constructed of a minimum 26 gauge sheet steel and shall have no openings into the garage.

10.6.1 Sizing crawlspace and garage fans

The Local Agency shall size the fan to maintain negative pressure relative to the dwelling unit during normal operating conditions. See also **Section 8.6, *Sealed Crawlspace***.

10.6.2 Crawlspace and garage fan controls

Exhaust fans installed in crawlspaces shall be wired to exhaust continuously with a switch near the fan to allow shut down of fan for maintenance.

10.6.3 Verification of fan performance

The Local Agency shall verify that fan performance during normal operating conditions creates a negative pressure with reference to the dwelling unit.

10.6.4 Fan rating

Fans installed for the purpose of maintaining a pressure boundary shall be rated for continuous operation.

10.6.5 Fan termination point

Fans installed for the purpose of maintaining a pressure boundary shall not terminate within five (5) feet of a door, window, combustion appliance air-intakes, or fresh air intakes.

10.7 Dryer ducting

Clothes dryer ducting installed shall comply with the following:

a. Extend directly to the outside of the structure.

b. Vent shall terminate in a non-screened vent cap with a damper. The exhaust duct shall terminate not less than 3 feet in any direction from openings into the building.

c. Have a smooth interior finish and shall be constructed of metal a minimum 0.016 inch (0.4 mm) thick. The exhaust duct size shall be 4 inches (102 mm) nominal in diameter.

d. The insert end of the duct shall extend into the adjoining duct or fitting in the direction of airflow. Screws shall not be used to connect dryer ducting.

e. Not exceed 25 feet in length from dryer location to outlet terminal. The maximum length shall be reduced two and one-half (2.5) feet for every 45 degree elbow and five (5) feet for each 90 degree elbow.

f. Both vertical and horizontal runs shall be supported using nylon, plastic, or metal strapping with a minimum width of ½ inch. Support strapping or hangers shall be installed within one (1) foot of a joint or connection and a maximum of every four (4) feet thereafter.

g. Horizontal runs shall be sloped downward toward the vent discharge.

h. Dryer ducts located in attic shall be insulated to a minimum R-11.

10.7.1 Dryer transition duct

The dryer transition duct is the ducting between the dryer and the point at which it goes through the wall, floor, or ceiling and leaves the vicinity of the dryer. This ducting shall be listed and labeled in accordance with UL 2158A. The transition duct shall not exceed eight feet in length and be long enough to allow for moving the dryer away from the wall, but not allow excess bending and kinking that can trap lint and water in the ducting. The transition ducting is not meant to pass through a wall, floor, or ceiling. The transition duct shall connect to a smooth metal duct or a metal collar where it penetrates the ceiling, wall, or floor.

10.8 Outdoor air inlets

Outdoor air inlets for individual rooms when installed shall:

a. Have a controllable and secure opening.

b. Be sleeved and flashed or otherwise designed so as not to compromise the properties of the wall or window in which they are placed.

c. Be screened (1/2" screen minimum) or otherwise protected to prevent entry of leaves, debris, or pests.

d. Not be located within ten (10) feet of hazardous or unsanitary locations.

Section 11.0 Dehumidifiers

Specs TOC

The installation of a dehumidifier is allowable, provided it is determined to be the most effective and cost-efficient method of reducing moisture problems or high moisture buildup in a home. Dehumidifiers shall be installed only after other measures with less of an energy penalty have been found ineffective at reducing moisture problems.

Moisture Problem Defined: *Any condition which, if left unattended, will allow moisture in any state (liquid, vapor, or ice) to damage the dwelling structure. Evidence of moisture problems includes, but is not limited to, visible rot, mold, peeling paint, swollen/bulged/soft building materials and/or discoloration of building component surfaces.*

11.0.1 Post-weatherization dehumidifier installation

A Local Agency made aware of a moisture problem developing as a result of, or still remaining after, installation of weatherization measures may return to a closed weatherization job and install a dehumidifier, if it is determined to be the most effective and cost-efficient method for reducing moisture buildup.

11.1 EnergyStar rated and AHAM certified

The dehumidifier installed shall be Energy Star rated and certified by the Association of Home Appliance Manufacturers (AHAM) Specification DH-1 (**www.AHAM.org**).

11.2 Sizing

The Local Agency shall size dehumidifiers for installation according to the general guidelines below, and shall be controlled by a humidistat to automatically maintain the desired humidity level. Dehumidifier capacity shall be determined by the rated capacity test contained in AHAM Specification DH-1.

Floor Area of House (sq. ft.)	Dehumidifier Capacity (Pints/24 hours)
Up to 1,000	25
1,000-2,000	30
2,000-3,000	35

11.3 Low temperature location

When the dehumidifier is to be located in a basement or other area where the normal operating temperatures are expected to be below 65 degrees Fahrenheit, the Local Agency shall install a dehumidifier rated to operate in “low temperature” conditions.

11.4 Electrical safety

The Local Agency shall observe all manufacturer warnings regarding electrical safety. The Local Agency shall not allow drain hoses, water drainage, or disposal near electrical circuits, cords, or devices.

11.5 Hose to drain required

The Local Agency shall install a hose to drain the dehumidifier's water bucket. Hose shall be mechanically attached to the water bucket outlet and terminate at a drain or sump. Hose installed shall not create a tripping hazard.

Section 12.0 Air Conditioning and Heating Systems

Specs TOC

Contractors shall ensure that upon completion of weatherization services all dwelling units have a safe, operable, permanently installed, and adequate heating system. Air conditioning system replacement, repair, or installation is allowed in homes of at-risk occupants where climate conditions warrant.

12.1 Inspection and testing of heating systems

The Local Agency shall inspect and test the heating system(s) in each dwelling unit for safe operation prior to delivering weatherization services. The Local Agency shall document in the client file the condition of heating system prior to weatherization. Refer to **Exhibit 5.S7A *Electric heating system work order example*, Exhibit 5.S7B *Gas forced air heating system work order example*, Exhibit 5.S7C *Oil forced air heating system work order example*,** or **Exhibit S7D, *Oil burner retrofit example*,** and **Exhibit 5.3.1A, *Combustion Safety Form*** .

12.1.1 Inspection of electric heating systems

The minimum requirement for electrically heated dwelling units is:

a. Visual inspection of the electrical system.

b. Visual inspection of heating system clearances to combustibles.

c. Visual inspection of air handler (if present).

d. Verification that the system is permanently installed and securely attached to the floor, wall, or ceiling.

The Local Agency shall test all forced air heating systems for heat rise. If the heat rise is outside the manufacturer's acceptable range the system fails. If the heating unit fails the heat rise test, The Local Agency shall have the appropriate repairs made or defer the project until the problem is corrected.

Exception: If manufacturer's acceptable heat rise range is unavailable, the default acceptable heat rise range is greater than 40° and less than 70° Fahrenheit.

12.1.2 Inspection and safety testing of gas and oil heating systems

The Local Agency shall ensure that dwelling units with combustion appliances are tested in accordance with theCommerce approved Combustion Safety Form. Refer to **Section 3, *Combustion Safety***.

12.2 Electric heating system service

Electric heating systems shall be serviced to:

a. Correct hazards identified during initial inspection.
b. Complete system checks and repairs detailed in the work order form.
c. Improve distribution efficiency.

12.2.1 Minimum service – no hazards

a. Fan blades and cabinet of the air handler cleaned free of all visible dirt.
b. Check and change furnace filter if necessary.

12.3 Gas and oil heating system service

Gas and Oil fired heating systems shall be serviced to:

a. Correct hazards identified during combustion safety inspection and testing.
b. Improve combustion or distribution efficiency.

12.3.1 The minimum service for a gas or oil heating system where no hazards have been identified:

a. Clean air handler of furnace or unit heater.
b. Check and change furnace filter if necessary.

12.4 System replacement

System replacement is allowable when the Local Agency determines that it is more cost effective to replace the system than it is to repair or replace inefficient, non-operable, unsafe components. Estimated repair costs, usable life and efficiency considerations used to justify decision to replace shall be documented in the client file.

12.4.1 Replacement for efficiency

Replacement of a gas or oil fired heating system is allowable to improve efficiency when justified using a Savings to Investment Ratio (SIR) greater than 1.0 as calculated by the computerized audit tool TREAT.

The Annual Fuel Utilization Efficiency (AFUE) rating of the existing heating system shall be determined either from the manufacturer's information or by the type and age of the unit.

a. The replacement cost shall be determined by the Local Agency using Commerce established procurement guidelines.

b. Generate SIR using TREAT software for replacement with 80% AFUE and 90% AFUE choose replacement efficiency with higher SIR.

12.4.2 Permit required

Necessary permits shall be obtained prior to the replacement of a system. All applicable code regulations must be met as described in **Section 1, *General Requirements***.

12.4.3 Minimum efficiency of new system

All new oil or gas heating systems installed shall have a minimum AFUE rating of 80%.

12.5 Wood and pellet stoves

The Local Agency shall have a trained technician perform a safety inspection on all operable solid fuel burning stoves. Repair technician shall list recommended corrections, and corrections made, for safe operation. This information shall be provided to the occupant and a copy kept in the client file.

12.5.1 Information on clean burning practices

The Local Agency shall provide all clients with solid fuel burning information pamphlet on clean and efficient burning techniques.

12.5.2 Fire Extinguishers

Providing fire extinguishers is an allowed health and safety cost only when a solid fuel burning appliance is present. When a fire extinguisher is provided, the manufacturer's instructions including the owner‘s manual, warranty, and the expected lifetime of the unit information shall be left with the occupant of the dwelling unit.

12.6 Ductless Heat Pumps

12.6.1 New Equipment Requirements

a. **Materials** – Equipment shall be a split system Ductless Heat Pump (DHP) with an inverter-driven, variable speed compressor, a variable speed outdoor fan, and a multi-speed or variable speed indoor blower unit. Equipment shall be manufactured by a company listed in the Air Conditioning, Heating and Refrigeration Institute (AHRI) Unitary Directory. The Weatherization Program promotes sustainability. The Local Agencies (LA) performing this work are

encouraged to utilize "green" materials and products wherever possible and make every effort to recycle waste material.

b. **Ratings** – Heat pump equipment shall meet the performance, safety, and rating requirements as given in the latest revision of AHRI Standard 240. Units shall be listed by Underwriters' Laboratories or equivalent and shall display the AHRI symbol of certification. The DHP equipment shall be listed by model number on the most current Bonneville Power Administration's Qualified Products List. Last accessed from http://www.bpa.gov/energy/n/residential/DHP/Index.cfm. The heat pump equipment shall be rated with a Heating Seasonal Performance Factor (HSPF) of 10.0 or greater if utilizing a single head or a HSPF of 9.0 or greater if utilizing multiple heads.

c. **Heat Pump Sizing** – The heat pump system shall be sized in accordance with the manufacturer's specifications and applicable codes to ensure adequate heat. If the system provides adequate heat at the winter design temperature, a separate back-up system is not required. Otherwise, the system shall be designed to include zonal electric resistance heat (either in unit or as separate zone heaters) up to the total capacity required by the house. Sizing of the DHP shall take into consideration the planned thermal improvements to the building through the weatherization program.

d. **Warranty** – Heat pump equipment shall be warranted by the manufacturer against defects in material and workmanship for a minimum of two years from the date of start-up of the equipment. In addition, the compressor shall be warranted by the manufacturer against defects in material and workmanship for a minimum of five years from the date of start-up. This warranty should not be considered to cover equipment failure caused by failure to perform normal maintenance, abuse or external causes beyond the control of the LA. A Statement of Warranty must accompany your invoice and must be provided to the building owner.

12.6.2 Local Agency Requirements

a. **Training** – The LA shall be responsible for the technical competence and qualifications of his or her salespeople, installers, and service technicians. Technicians must attend the Northwest Ductless Program orientation and be listed on the Northwest Ductless website. At least one technician working on the job site must have received certified installation training from the manufacturer of the installed DHP equipment and be certified as a Type II technician as required by 40 CFR Part 82, Subpart F.

b. **Electrical** - All electrical connections and repairs are to be performed by individuals who, working for a licensed electrical contractor, have received appropriate electrician certifications from the Washington State Department of Labor and Industries (L&I). Electrical repairs are to be conducted under the supervision of an electrical administrator. L&I provides both electrician and administrator certifications for various levels of electrical work. The LA is responsible for obtaining required certifications and licensing for self-

performance of electrical repairs or for subcontracting electrical repairs to a properly licensed electrical contractor.

c. **Owner Instruction** – The LA shall instruct the building owner in proper operation and maintenance of the DHP system. The LA shall provide the building owner with the manufacturer's owner's manual, demonstrate filter replacement/cleaning and demonstrate the operation of indoor thermostat controls and indicator lights. The LA shall explain to the building owner the different operating modes of the heat pump system (e.g. heating, cooling, defrost). All this information shall be provided in the owner's manual given to the building owner. The LA shall instruct the building owner how to operate the DHP in coordination with the existing zonal systems in the home. Instructions shall include adjusting other zonal thermostats so the DHP is the primary heating system.

d. **Safe Work Practices** – This work will usually not disturb lead based paint nor asbestos. All work that may disturb lead based paint must be performed in accordance with federal and state regulations, including the use of Lead Safe Weatherization practices (LSW) and in compliance with the EPA's Renovation, Repair, and Painting Rule (RRP). The LA must document crew certification for compliance with LSW and RRP. In addition, the LA must keep abreast of changes in federal or state requirements regarding lead based paint and comply accordingly. Failure to utilize LSW/RRP, where required, may lead to immediate work stoppage, clearance testing, relocation of occupants, clean-up and/or legal claims. The LA is responsible for costs of activities that arise from a failure to follow the lead safe protocol.

12.6.3 New Equipment Installation

Pursue compliance with federal, state, and local building and environmental codes for the installation of this product. Follow manufacturer's installation instructions and specifications. The following specifications are not intended to replace manufacturer's specifications.

a. **Permits** – The LA shall be responsible for all permits required by State and local ordinances for the installation of the heat pump system. The LA shall provide the building owner and the Local Agency with copies of all permits related to the work.

b. **Access** – Equipment shall be located to allow easy service access and adequate working space for servicing any component without removal of piping or other permanently installed fixtures. Components that require frequent attention, such as filters, shall be located in easily accessible areas. Installations located in attics or crawlspaces are not allowed.

c. **Location of Indoor Unit** – Indoor unit shall be located in the main living area, located for best air circulation. Unit shall be installed level and located high on the wall.

d. **Location and Support of Outdoor Units** – Outdoor units shall be located to avoid restrictions in the outdoor airstream. Defrost melt shall not drain onto areas where ice formation may create a hazard (walkways etc.). Outdoor units must be installed level. Outdoor units will be installed with either of the following methods:

   1. Units may be anchored to risers which are secured with an adhesive and mechanical connection to an adequate, solid pad which provides proper drainage and prevents a buildup of water, snow or ice. A minimum clearance shall be provided as per manufacturer's instructions and recommendations. In any installation there shall a minimum of 3" of free and clear area under the outdoor coil drainage area.
   2. Units may be mounted on the building exterior wall, secured and supported according to the manufacturer's instructions following noise and vibration abatement requirements.

e. **Refrigerant Tubing** – Factory tubing flares and fittings are NOT to be reused. Create new flares using appropriate R410a flaring tool and measurement gauge. Apply refrigerant oil to the end of each flare. Connect tubing with R410a nuts (supplied with indoor and outdoor units) using a torque wrench tightened to manufacturer's specifications.

f. **Refrigerant Charge** – Technician shall follow manufacturer's guidelines when charging a new system and make any needed adjustments for non-standard line set lengths using a programmable refrigerant charging scale.

g. **Electric Wiring** – When attached to the exterior walls shall be in conduit to protect them from contact and exposure. All field wiring, line and low voltage, shall comply with the manufacturer's recommendations, the National Electrical Code and all applicable local codes and ordinances. All interior wiring is to run along walls where possible and along the edge of the ceiling where it is necessary to run on the ceiling.

h. **Filters** – Indoor unit shall come with air filters installed from the factory.

i. **Ductless** – The heat pump will be fully ductless. Units using any type of field installed duct system are NOT eligible.

12.6.4 Noise and Vibration Abatement

a. Outdoor units should be located to avoid transmission of objectionable noise to adjacent properties, sleeping areas or other areas where noise control is critical. Outdoor units shall comply with all state and local noise control ordinances. The LA shall be responsible for any modifications necessary to reduce noise. Unit base shall not be connected to the foundation.

12.6.5 Refrigerant Piping

This section applies to the copper refrigerant line sets

a. **Materials** – Field-supplied refrigerant piping shall be clean, dehydrated, sealed and seamless copper tubing or the manufacturer's pre-charged tubing. Fittings shall be wrought copper. Field supplied tubing shall be evacuated to 500 microns and purged and pressure tested as per manufacturer's recommendation, soft solders shall not be permitted.

b. **Sizing** – To maintain oil return to the compressor and avoid inefficiency and capacity loss, refrigeration piping or refrigeration line set shall be sized and installed in accordance with the manufacturer's instructions and recommendations. Piping between the two sections of split units shall not exceed the manufacturer's maximum recommended length, horizontally or vertically, and shall be run parallel to building lines and in a straight and workmanlike manner to prevent oil traps.

c. **Support** – Refrigerant piping shall be properly supported in accordance with manufacturer's specifications, AHRI and IMC (International Mechanical Code).

d. **Penetrations** – Refrigerant piping passing through openings in the unit cabinet or the building structure shall be installed to prevent wear or sound generation due to contact with the cabinet or building structure. All penetrations in the envelope of the building shall be properly sealed with an insulative sealant.

e. **Insulation** – Refrigerant lines shall be insulated with a minimum of ½" thick continuous closed-cell foam rubber. Insulation must cover entire line set length. Where refrigeration line sets run on the exterior of the building they shall have a rigid line hide weatherproof covering.

f. **Leak Testing, Evacuation and Charging** – Factory as well as field-fabricated joints shall be checked, and any leaks found shall be repaired. Evacuation and charging shall be done in accordance with the manufacturer's instructions and recommendations.

12.6.6 Condensate System

a. **Condensate Drain** – Line shall slope downhill to allow for gravity flow of condensate to terminate outside of the building.

b. **Piping Material** – Condensate drain piping shall meet IMC and should be copper, plastic or other corrosion-resistant material.

c. **Drains** – Condensate drain lines shall run to an open drain or location outside of the building foundation. Condensate shall not drain onto areas where ice formation may create a hazard (walkways etc.). Under no circumstances may condensate be drained into a crawl space or direct connected into a sewer line.

d. **Condensate Pump** – Condensate pumps are not recommended unless there is no other alternative. If a condensation pump must be installed, follow the manufacturer's installation requirements.

12.6.7 Indoor Thermostats

a. **Wireless Remote Control** – A wireless remote control is standard equipment for adjusting the indoor comfort. Wireless remote controls are to be provided to the building owner.

12.6.8 Existing Equipment

Existing Heaters – The building is currently heated by existing heaters. The heater located in the same area as the heat pump is to be disabled and left in place. The corresponding thermostat is to be disabled and also left in place. The other heaters are to remain operational; this includes those within the bedrooms of the apartments and those in the common areas.

12.6.9 Damages

a. The LA will be held responsible for any and all damages created during the performance of the work.
b. All debris resulting from the work will be removed and legally disposed of with every effort made toward recycling waste material.

12.6.10 Disclaimer

If a conflict between the Section 12.6 guidance document and the local building department's equipment installation requirements, the local building official's requirements take precedence. This document is only to be used as a general guide for providing quality products and installation. For complete information regarding installation requirements, features, benefits, operation, and maintenance, review the manufacturer's installation manual of the product being installed.

Section 13.0 Heating and Cooling Ducts

Specs TOC

All heating and cooling ducts located outside the heated envelope of the dwelling unit shall be insulated to a minimum of R-8. Where determined necessary by diagnostic testing, leakage in ducts will be reduced to lowest practical level. When ducts are insulated or sealed they must meet the requirements detailed in this chapter.

13.1 Duct survey, inspection, and testing

The Local Agency shall conduct diagnostic testing and visually inspect all accessible ducting in the heat distribution system including the plenum, trunk and branch lines. Refer to **Section 4, *Diagnostic Testing***.

13.2 Pressure pan testing required

Pressure pan testing of duct systems is required. Refer to **Section 4.2, *Zonal pressure testing***.

***Exceptions*:**

a. The Local Agency may elect to have ducts tested using a duct testing device and the associated procedures outlined by the manufacturer as an alternative to pressure pan testing.

b. The entire distribution system is located within the envelope's conditioned space.

13.3 Dominant duct leak test required.

Dominant duct leak test is required. Refer to **Section 4.3, *Dominant duct leak testing***.

13.4 Ducts, duct sealing. and duct insulating materials

Materials used for replacement, repair, and sealing of ducts shall be approved and listed in **Exhibit 5.S10, *Standards for Weatherization Materials***.

13.5 Ducts to be repaired or replaced

The Local Agency or Subcontractor shall reconnect all serviceable ductwork found disconnected from boots, trunks, or plenums. Method used for reconnection shall be permanent and appropriate to the materials being connected. All ductwork that is torn, crushed, or severely deteriorated shall be replaced or repaired.

13.6 Duct sealing

When determined necessary by diagnostic testing or visual inspection, ducts shall be sealed to the following standard:

a. All accessible connections to the air handler cabinet and plenums both inside and outside shall be sealed to provide permanent, air tight connections using mastic, mastic and fiber mesh, or aluminum butyl tape.

b. All accessible ductwork-to-ductwork connections both inside and outside shall be sealed to provide permanent, air tight connections using mastic, mastic and fiber mesh tape, or aluminum butyl tape.

c. All accessible elbows, holes, joints, seams, including lateral seams shall be sealed to provide permanent, air tight connections using mastic, mastic and fiber mesh tape, or aluminum butyl tape.

13.6.1 Gaps

Gaps greater than 1/8 inch shall be sealed with a 2-inch wide fiber mesh tape embedded in mastic.

13.6.2 Timing

Ducts shall be sealed prior to insulating.

13.7 Flex duct requirements

a. Flex duct, existing or installed, shall be insulated to a minimum, effective R-8.

b. Flex duct shall be of the proper length for connection between two points without excessive bends or sag.

c. Horizontal and vertical runs of flex duct shall be supported using nylon, plastic, or metal strapping having a minimum width of ½ inch. Support strapping or hangers shall not compress the insulation.

d. Support strapping or hangers shall be installed within 1 foot of a joint or connection with a maximum of 4 feet between supports.

e. Flex duct shall not be installed in a manner allowing direct contact with the ground.

f. Flex duct shall be connected to metal collars or boots. The inner layer of the flex shall be secured using a compression strap. The outer layer of insulation shall also be secured using a compression strap.

13.8 Metal duct

a. Metal duct, existing or installed, in unconditioned spaces shall be insulated to a minimum, effective R-8.

b. Metal ducts shall be of proper length without unnecessary elbows or changes in direction.

c. Sections shall be securely connected to each other using a minimum of 3 screws for round ducts and 4 for rectangular.

d. Insulation shall be permanently secured with rot and stretch proof twine or rust-proof wire, without unduly compressing the insulation.

e. Horizontal and vertical duct runs shall be supported using nylon, plastic, or metal strapping having a minimum width of ½ inch. Support strapping or hangers shall not unduly compress the insulation.

f. Support strapping or hangers shall be installed within 1 foot of a joint or connection with a maximum of 4 feet between supports.

g. Metal ducts shall not be installed in a manner allowing direct contact with the ground.

13.9 Rigid fiberglass duct board

Rigid fiberglass duct board shall not be used to fabricate ducts.

13.10 Perimeter wall insulation

Where perimeter insulation, R -10 or greater, has been installed on the walls surrounding a basement or sealed crawlspace containing heating or cooling ducts, the ducts shall not be insulated unless a SIR greater than 1 is demonstrated.

Section 14.0 Thermostats

Specs TOC

Installation of a thermostat or replacement of an existing thermostat is allowable.

14.1 Determining type of thermostat to install

Contractor shall determine if a standard or a programmable thermostat should be installed, and install the appropriate thermostat. All thermostats shall have a dead-band range of less than two degrees. To meet this requirement bi-metal, line-volt thermostats shall have third party verification

14.1.1 Operating instructions for programmable thermostats

The Local Agency shall ensure that the dwelling unit occupants fully understand the benefits of a programmable thermostat and can demonstrate how to program the thermostat for optimal use, and how to change the back-up battery.

14.2 Thermostat power source

Thermostats shall be source powered. Programmable thermostats shall also have a battery backup.

14.3 Required thermostat features

Thermostats shall be digital, have a built in anti-short-cycle feature and include a positive on-off switch that is easily accessible. Programmable thermostats shall also have a 7-day cycle, or a 5 day-2 day cycle, a set-back capability of at least 10 degrees, and provide at least 4 program periods per day.

14.4 Location

All installed thermostats shall be reachable and readable by the primary occupant(s).

14.5 Placement

The top of the thermostat shall be 60 inches from the floor. When an occupant uses a wheelchair, thermostat top shall be 48 inches from floor.

14.6 Thermostats for heat pump systems

Thermostats used with heat pump systems shall be designed so that temperature pick-up is accomplished by using heat pumping as much as possible, and electric resistance elements only when necessary.

Section 15.0 Water Pipe Insulation in Unconditioned Spaces Specs TOC

The Local Agency shall install insulation on accessible hot and cold water lines in unconditioned spaces.

Exceptions: Water pipes shall not be insulated if any of these conditions are present:

a. Water pipes or valves are leaking or are improperly supported.

b. When electric heat tape is being used to prevent freezing of pipes.

15.1 Pipe insulation R-value

Water pipe insulation installed by the Local Agency shall have a minimum effective insulation value of R-3.

15.2 Installation standard for foam pipe insulation

Insulation shall be installed to these standards:

a. Insulation with a lengthwise slit shall be positioned on horizontal pipe so that the slit is on the bottom side of the pipe.

b. Insulation shall be sized to fit and firmly secured to the pipe. Products that are glued shall use the manufacturer's recommended adhesive and all slits in the material shall be sealed.

c. Products that are not glued shall be held in place with elasticized tape, wire, or plastic ties.

d. Elasticized tape shall be applied every nine (9) inches on center, and around each joint between separate pieces of material.

e. If ties are used, they must be made of either galvanized wire or non-slipping plastic.

f. The ties shall be spaced at one inch from each end of the material and thereafter every nine (9) inches on center.

g. Other techniques for attaching pipe insulation may be acceptable if approved in writing by Commerce.

h. Insulation material shall be cut and folded, or otherwise molded, to completely cover all elbows or curved pipe without compressing the insulation or allowing gaps to occur in the insulation.

15.3 Installation standard for fiberglass

If fiberglass batts are used, then the batts shall be at least R-7 when flat. After installation a minimum of R-3 shall be present on any water pipes, including piping for refrigerator ice makers that are not enclosed within the floor insulation. The insulation shall be permanently attached to the pipe with wire, cable ties, twine, strapping tape, or by other approved methods. Waste or drain pipes are excluded from this insulation requirement. Water pipes that are protected by (enclosed within) installed floor insulation are not required to be separately wrapped.

15.4 Insulation of pipes exposed to weather

If insulation is installed on pipes exposed to the weather, then such insulation shall be resistant to degradation from moisture, ultraviolet light, and extremes in temperature, or a jacket or facing shall be installed that protects the insulation from these conditions.

Section 16.0 Water Heater Insulation

Specs TOC

Water heaters in unconditioned spaces shall be insulated.

Unconditioned space (in relation to water heaters) defined*: The areas of a dwelling unit that are not intentionally heated.*

***Exceptions*:** A tank shall not be insulated if any of the following conditions exist and cannot be corrected with available funding:

a. Internal insulation is R-10 or greater.

b. There is evidence of leaks or other impending failure.

c. External insulation is prohibited by the manufacturer.

d. There is evidence of improper combustion for a gas-fired unit.

e. Vent pipe or draft hood is improperly installed.

f. There is improper or inadequate venting for a gas fired unit.

g. Combustion air supply is improper or inadequate.

h. A temperature and pressure relief valve is not present or is located more than 6 inches from the tank or is capped or plugged.

i. Hazardous or improper electrical connections are present.

j. Thermostat cover plate is not present.

k. Burner access doors are not present.

l. Adequate clearances cannot be maintained.

16.1 Insulation wrap R-value

Insulating wraps shall have an insulation value of R-10 or greater.

a. Insulate the first 6 feet of both cold-water inlet and hot-water outlet pipes beginning at the water heater tank, to a minimum of R-3.

b. For water pipe insulation installation standards, refer to **Section 15, *Water Pipe Insulation in Unconditioned Spaces***.

16.2 Minimum clearances for heat producing appliances and venting

Clearances between the surface of the wrap or pipe insulation and adjacent heat producing appliances, including vent connectors, shall be maintained according to state and local codes.

16.3 Enclosure wall clearances

Water heaters shall meet the manufacturer's clearance requirements when installed in closets and enclosed spaces.

16.4 Temperature setting

Prior to the installation of an insulating wrap, the hot water temperature shall be set at 120 degrees F. Test the water temperature, measured at a sink and adjust setting so that the temperature is within the range of 120 – 130 degrees F.

Exception: If the client requests a temperature outside the accepted range of 120 – 130 degrees F the Local Agency shall document this request in writing in the client file.

16.5 Installation procedures

Insulation wraps shall be installed according to the methods and procedures in the ***Energy OutWest Weatherization Field Guide*** **Section 4.2,** ***Domestic Hot Water Systems, Water Heater Blankets***.

http://www.commerce.wa.gov/Documents/HIP-Weatherization-Energy-Out-West-Field-Guide.pdf

16.6 Safety label

A Commerce approved safety label shall be installed on the insulating wrap in a visible location. For a sample label with the information required on the label See **Exhibit 5.S8,** ***Safety Label for Domestic Water Heaters***.

Section 17.0 Windows

Specs TOC

Window replacement or repair is allowable for any of the following reasons as long as the conditions of Commerce's window replacement and repair policy are met.

17.0.1 Energy efficiency

Windows and storm windows may be replaced or repaired for energy efficiency reasons if the investment of Commerce administered Wx funds (DOE. HHS, BPA, and MM) is justified using an evaluation of cost-effectiveness where the Savings to Investment Ratio (SIR) is 1or greater. See Commerce policy **Chapter 5, *Providing Weatherization Services*;** and **Section 5.1A.2a, *Energy Audits***.

17.0.2 Health and safety reasons

Windows may be replaced or repaired if the window's condition is compromising the health and safety of the dwelling unit occupants. If the cost to replace the window is less than the cost to repair the window, then the window shall be replaced.

17.0.3 Security reasons

Windows may be replaced or repaired for security reasons. If the cost to replace the window is less than the cost to repair or replace components of the window that will reasonably assure that the window is secure, then the window shall be replaced.

17.0.4 Durability reasons

Windows may be replaced or repaired for durability reasons if any window components have failed or are deteriorated and they have compromised the structural integrity of the window or of the wall framing around the window. If the cost to replace the window is less than the cost to repair the window, then the window shall be replaced.

17.0.5 Client comfort

Specific windows that affect client comfort may be replaced. Written justification of need for each window must be in the client file. No more than 2 windows may be replaced in a home for client comfort reasons.

17.1 Lead based paint

The Local Agency shall address painted window components in houses built before 1978 using lead safe work practices unless testing indicates no lead based paint is present. See **Section 21, *Lead Based Paint***.

17.2 Replacement windows

Replacement windows shall have a U-factor rating of 0.30 or less and an air leakage rating of less than 0.3 cfm/sq.ft. An area weighted U-factor calculation may be used to demonstrate compliance. The replacement window shall have a label from the National Fenestration Rating Council (**http://www.nfrc.org/label.aspx**) that indicates the U-factor rating, the air leakage rating, the appropriate structural performance rating for the geographical area where the window is installed, and the appropriate solar heat gain coefficient (SHGC) for cooling climates.

17.2.1 Photo documentation

Both a dated electronic or printed "before" photo and written justification that clearly identifies the physical reason the window needs replacement shall be retained. The photo documentation or a reference to its location shall be kept in the client file.

17.2.2 Screens

All replacement windows that are openable shall have a removable insect screen.

17.2.3 Exterior and interior trim

Trim shall be installed in a workmanlike manner and shall match the existing trim as much as is reasonably practical. Exterior trim, for replacement windows, whether existing or new, shall have any bare wood surfaces primed with an exterior grade primer.

Exception: If cedar trim is used in an exterior application, then no primer or sealer is required.

17.3 Storm windows

A storm window may only be installed over a prime window that is structurally sound. The prime window shall be free of decay, broken windowpanes, worn or damaged rollers, missing, deteriorated or broken glazing, and broken sashes. The Local Agency shall evaluate the costs to replace a window unit with the costs associated with repairing a prime window and installing a storm window to ensure that the most cost-effective treatment is applied.

17.3.1 Operable storm windows

Operable storm windows shall be installed over existing operable prime windows, and the storm window shall not interfere with the operation of the prime window. If the operation of the prime window is impeded by paint buildup, mechanical fasteners, or other reasons, a storm window can be installed if the window is restored to an operating condition or if the Local Agency and homeowner agree in writing that the non-opening window is not required for egress or ventilation.

17.3.2 Storm window removal

All storm window installations shall provide an easy method of removing the storm sashes so that both the storm and prime windows can be washed.

17.3.3 Jalousie prime windows

Jalousie windows or other window types with a glass-to-glass contact cannot be weatherized using a storm window. Jalousie windows may be replaced.

17.4 Safety glass

Safety glass shall be used in replacement window units or replacement glazing in locations where required by building codes and areas identified in the following sections.

17.4.1 Sidelights

When sidelight windows are replaced or repaired, safety glass is required when all of the following conditions are met:

a. The glazed panel is within 12 inches of the door opening.
b. The glazed panel is within 60 vertical inches of the floor.
c. The window is in the same plane as the door when the door is closed.

17.4.2 Other safety glass locations

Safety glass shall be installed when all of these conditions are met:

a. A glazed panel is greater than 9 square feet when measured from the inside of the sashes.
b. The lowest edge of a glazed panel is less than 18 inches above a walking surface.
c. There is a walking surface within 36 horizontal inches of a glazed panel.

17.4.3 Shower and tub safety glass requirements

Safety glass is required in shower and bathtub enclosures for exterior windows that are less than 60 inches above the floor of the enclosure.

17.4.4 Safety glass requirements

Safety glass shall conform to the Safety Glazing Certification Council (SGCC) labeling requirements. Installed safety glass shall have a permanently affixed manufacturer's label or etching.

17.5 Replacement glazing

Replacement glazing shall meet the specifications found in **Exhibit 5.S10*: Standards for Weatherization Materials***.

17.6 Obscure glass

Obscure glass shall be installed in windows where privacy is important. The Local Agency shall make the owner aware of locations where obscure glass is to be installed.

Section 18.0 Doors

Specs TOC

Door replacement or repair is allowable for the following reasons as long as the conditions of Commerce's door replacement and repair policy are met.

18.0.1 Energy efficiency

Doors can be replaced or repaired for energy efficiency reasons if the total cost to install is justified using an evaluation of cost-effectiveness where the Savings to Investment Ratio (SIR) is 1 or greater.

18.0.2 Health and safety reasons

Doors can be replaced or repaired for health and/or safety reasons if the door's condition is compromising the health and/or safety of the dwelling unit occupants. If the cost to replace the door is less than the cost to reasonably repair the door, then the door shall be replaced.

18.0.3 Security reasons

Doors can be replaced or repaired for security reasons. If the cost to replace the door is less than the cost to repair or replace components of the door that will reasonably assure that the door is secure, then the door shall be replaced.

18.0.4 Durability reasons

Doors can be replaced or repaired for durability reasons if any door components have failed or have been damaged and they have compromised the structural integrity of the door. If the cost of replacement is less than the cost to reasonably repair the door, then the door shall be replaced.

18.1 Lead based paint on door components

The Local Agency shall address painted door components in houses built before 1978 using lead safe work practices, unless testing indicates that no lead is present. See **Section 21, *Lead Based Paint***.

18.2 Replacement doors

Replacement doors shall be metal, insulated, and match the style of the existing doors where practical, and shall be hinged. If a new exterior door and jamb is being installed, the door shall have three hinges. All exterior door replacements shall be exterior grade. All replacement doors shall have an insulated core with a minimum R-6 insulation value.

***Exception*:** Wood, fiberglass, or composite doors are allowable if a metal door cannot be used. Wood doors shall be solid core. Veneers on wood doors shall be a minimum of 1/8 inch thick hardwood.

18.2.1 Photo documentation

Both a dated electronic or printed "before" photo and written justification that clearly identifies the physical reason the door needs replacement shall be retained. The photo documentation or a reference to its location shall be kept in the client file.

18.2.2 Exterior and interior trim

Trim shall be installed in a workmanlike manner and shall match the existing trim as is reasonably practical. Existing or new trim shall have all nails set and holes filled with an exterior grade filler. Exterior trim for replacement doors and doorframes, whether existing or new, shall have any bare wood surfaces primed with an exterior grade primer.

***Exception*:** If cedar trim is used, then no primer or sealer is required.

18.3 Replacement door jambs

Replacement doorjambs shall have a width that is no greater than the finished wall thickness, and not less than ¼ inch of the finished wall thickness.

18.4 Door finishes

Replacement wood doors will be primed and painted or sealed on both sides and on all four edges with an exterior grade paint. Metal doors shall have a factory primer.

18.5 Locksets and deadbolts

New replacement doors shall have a new lockset and deadbolt installed. The lockset and deadbolt shall be keyed alike. The Local Agency will provide two keys to the owner or occupant of the dwelling unit. When multiple locksets are installed in the same dwelling unit they shall have matching keys.

18.6 Other attached items

Address numbers that were present on the existing front door or trim shall be reinstalled on the new door. Peepholes shall be installed on solid doors and shall be no more than 60" from the bottom of the door. If an existing door had a mail slot or mechanical doorbell, the Local Agency shall provide alternatives that do not require penetration of the door.

Section 19.0 Carbon Monoxide (CO) Detectors

Specs TOC

In every dwelling unit a minimum of one operable carbon monoxide detector shall be installed. Replacement of operable CO Detectors is not an allowable cost.

19.1 Detector standards

Detectors shall have:

a. A 5-year warranty for residential models or 1-year warranty for commercial low-level models.

b. An electrochemical sensor.

c. A digital display that indicates CO levels in Parts Per Million (ppm).

d. The ability to detect at least 15 ppm.

e. A label to verify testing and listing to the UL 2034 Standard.

Exception: CO Detectors need not be UL listed if a low level detector is desired. To comply with this exception, these commercial low-level detectors must meet or exceed all of the following:

(1) a. through d. above.

(2) ACGIH and NIOSH Standards.

19.2 Detector power options

a. Hardwired detectors

Hardwired detectors are allowable. Hardwired detectors shall have a 9-volt, lithium battery backup.

b. Battery-operated detectors

Battery operated detectors shall have a lithium battery. They shall make an audible alarm when the battery is at the end of its life cycle.

c. Plug in detectors

Plug in detectors shall have a tamper-resistant connection to a continuously energized 120-v AC power source. They shall not be on a switched plug or on a GFCI protected circuit. Plug in detectors shall have a battery backup.

19.3 Labeling devices

All installed detectors shall be labeled in a permanent fashion with the date of installation or replace-by-date as per manufacture's specification is visible while detector is mounted on the wall.

19.4 Manufacturer's instructions

The manufacturer's instructions including the owner's manual, warranty, and the expected lifetime of the unit information shall be left with the occupant of the dwelling unit.

19.5 Education of dwelling unit occupants

The Local Agency shall provide the occupant(s) of the dwelling unit with verbal and written information regarding the dangers of CO, how to read the CO detector, instructions on how to respond to CO levels above 10 ppm, and the applicable information regarding the expected useful life of the CO detector installed. The Local Agency shall document in the client file that the occupant(s) received the CO detector information.

19.6 Installation location(s) for CO detectors

In dwelling units with combustion appliances or attached garages a minimum of one operable carbon monoxide detector shall be installed in the vicinity of each sleeping area and on each level with a combustion appliance.

Detectors must not be located contrary to manufacturer's specifications. Where practical, detectors shall be mounted:

a. In a visible location.

b. On walls between 5 and 6 feet from the floor.

c. No closer than 5 feet from combustion appliances, chimneys, flues, or inside corners.

19.7 Installation in sleeping rooms

A CO detector shall be installed inside any closable sleeping room that contains a combustion appliance.

19.8 Testing

The Local Agency shall test each detector for proper operation after installation as per test procedures in the owner's manual provided by the manufacturer.

Section 20.0 Smoke Detectors

Specs TOC

Installation of smoke detectors is allowed where detectors are not present or are inoperable. Replacement of operable smoke detectors is not an allowable cost. When installed, smoke detectors shall be installed in accordance with manufacturer's requirements.

20.1 Detector standards

Detectors installed by the Local Agency shall have a minimum ten-year operating life, and shall be clearly marked as "UL approved."

20.2 Detector power options

Detector shall be powered by one of the following methods:

a. Hardwired: Hardwired detectors are allowable only when the installation is approved in advance by the Commerce monitor assigned to the Agency. Hardwired detectors shall have a lithium battery backup.

b. Battery operated: Battery operated detectors shall have a lithium battery. They shall make an audible alarm when the battery is at the end of its life cycle.

***Exceptions*:**

a. Existing hard-wired smoke detectors that are not working may be replaced with a new hard-wired smoke alarm.

b. Smoke alarms with a visual alarm for hearing impaired individuals shall be installed in addition to a standard smoke alarm.

20.3 Labeling devices

All installed detectors shall be labeled in a permanent fashion with a visible date of installation while detector is mounted on the wall.

20.4 Manufacturer's instructions

The manufacturer's instructions including the owner‘s manual, warranty, and the expected lifetime of the unit information shall be left with the occupant of the dwelling unit.

20.5 Education of dwelling unit occupants

The Local Agency shall provide the occupant(s) of the dwelling unit with verbal and written information regarding the operation of the smoke detector(s), the importance of testing and battery replacement.

20.6 Installation location(s) for smoke detectors

Smoke detectors shall be installed on walls or ceilings per manufacturer's requirements.

20.7 Testing

The Local Agency shall test each detector for proper operation after installation.

Section 21.0 Lead Based Paint

Specs TOC

All weatherization work shall be performed following the DOE Lead Safe Weatherization protocol.

21.1 Applicable regulations and requirements

The regulations and requirements for lead based paint can be found in **Section 5.13 of the DOE *Weatherization Program Notice (WPN) 03-1*** and ***WPN 02-6***., *WPN 08-6, and WPN 09-6.*

21.2 Worker certification

All individuals performing weatherization work in target housing shall have training and receive a certificate of completion from the federal or state agency, or state approved training entity for the Lead Safe Weatherization and Work Practices based on the Montana State University (MSU) curriculum, and shall be a Renovation, Repair, and Painting Certified Renovator. The Work Practices component shall be hands-on training, and include all of the 11 required RRP hands-on activities, plus an additional four hours of hands-on training in work practices that includes setting up a window J-bag and performing a window change-out; performing a thermostat change-out; setting up a trough for an exterior wall drill and practicing drilling using water mist, shaving cream and a shrouded drill hooked up to a hepa vac; drilling through sheetrock using mist, shaving cream and a vac held near the hole saw; setting up a zip wall; and performing a hepa vac filter change-out.

***Exception*:** Workers who are in their first nine months of employment are exempt from the worker certification requirement, but they must be working with a certified lead safe weatherization worker any time they are performing lead safe weatherization work.

21.2.1 Records of certification

The Local Agency shall keep records of certification at the Local Agency's office for all workers performing lead safe work. Subcontractors shall provide the Local Agency with records of certification of workers who are performing lead safe weatherization work.

21.3 Client notification

The Local Agency shall give to the occupant(s) of target housing a copy of the EPA pamphlet *"Renovate Right"* before the start of any work. A Spanish version is available: *"Remodelar correctamente"* The Local Agency shall document in the client file that the occupant(s) received the EPA pamphlet.

21.4 When Lead Safe Weatherization protocols apply

Lead Safe Weatherization protocols shall be followed if a dwelling unit was constructed before 1978.

Exceptions:

a. Dwelling unit tested and determined to be free of lead based paint.

b. The amount of disturbed lead based paint surface does not exceed de minimus levels (6 square feet per room of interior surfaces, 20 square feet of exterior surfaces, 10% of a small component type, such as a window sill).

   The de minimus level exemption shall ***NOT*** apply to any of the following work:

   1. Window replacement,
   2. Demolition of painted surface areas, or
   3. Using any of the prohibited work practices, including but not limited to:
      (a) Open-flame burning or torching;
      (b) Machines to remove paint through high-speed operation without HEPA exhaust control; or
      (c) Operating a heat gun at temperatures at or above 1100 degrees Fahrenheit

c. As a result of the work, the OSHA/DOSH airborne lead level will not exceed 30 micrograms per cubic meter.

Lead Safe Weatherization protocols shall be followed if the agency chooses to assume the dwelling unit has lead based paint and the anticipated weatherization work will disturb more than the de minimus levels.

21.5 Documentation

The Local Agency will document in the client file all of the following that apply:

a. That lead based paint is presumed to exist in the dwelling unit.

b. Any testing, and the test results, that were done to identify lead based paint hazards.

c. A description, including location in the dwelling unit, of the weatherization work that was done using lead safe work practices.

Section 22.0 Low-Cost No-Cost Measures

Specs TOC

The purchase and installation of Low-cost No-cost energy conservation measures is allowable.

22.1 Types of measures

Installation of any of the following Low-cost No-cost measures are allowable:

a. Water flow restrictors.

b. Furnace or cooling filters, up to one-year supply.

c. Items that are primarily directed at reducing infiltration, such as weather-stripping, caulking, and glass repairs.

d. Brochures and other written information concerning the potential savings from installation of Low-cost No-cost measures.

e. Compact fluorescent light bulbs.

Section 23.0 Lighting Retrofits

Specs TOC

Retrofit of lighting fixtures is allowable if the cost is justified using an evaluation of cost-effectiveness where the Savings to Investment Ratio (SIR) is one or greater.

23.1 Type of fixtures

Fixtures that are installed shall be hard-wired fluorescent or LED fixtures that meet all of the following:

a. UL listed.

b. EnergyStar compliant or comparable in energy use and cost.

c. Fully warranted for one year after the date of installation.

d. Interior fixtures shall be with electronic ballast only.

23.2 Exterior fixtures

Exterior fixtures shall be constructed of UV resistant materials and rated for installation in damp or wet locations. Magnetic ballast fixtures are allowed.

23.3 Installation requirements

Fixtures shall be installed in accordance with all applicable codes governing installation of electrical devices and shall be installed by a contractor licensed to perform this work.

Section 24.0 Compact Fluorescent Lamps

Specs TOC

The Local Agency shall replace incandescent screw-in light bulbs that typically operate continuously for more than three hours with compact fluorescent screw-in bulbs (CFLs) in each dwelling unit receiving weatherization services. CFLs may be installed in other areas where lighting is frequently used.

***Exceptions*:** CFLs should not be installed if any of the following conditions exist:

a. Socket or fixture is nonfunctional, damaged, or unsafe.

b. Circuit is controlled by a solid-state timer.

c. Circuit is controlled by a non-CFL compatible dimmer.

d. Fixture is located in a storage room, closet, or other seldom used room.

e. Fixture is controlled by an occupancy sensor.

f. The client refuses to have CFLs installed.

24.1 Types of compact fluorescent lamps

CFLs that are installed shall be EnergyStar compliant and be warranted for one year from the date of purchase.

24.2 Light output

CFLs must provide light output levels that meet or exceed the level of the bulbs that they are replacing.

24.3 Torchiere replacement

With client approval, high intensity incandescent or halogen 1200w or more shall be removed and replaced with Energy Star rated compact fluorescent light bulbs or CFL torchiere lamps.

24.4 Outdoor locations

CFLs may be installed in outdoor locations attached to the dwelling provided they are installed in a fixture that protects the lamp from the weather.

24.5 Field testing

The installer shall test all installed CFLs before leaving the dwelling unit, and shall ask the client if the lighting level is adequate, if the client is available.

24.6 Consumer conservation education: Disposal of CFLs

The Local Agency shall give to the occupant(s) information on the proper disposal of CFLs in their area. CFLs contain about 4 milligrams of mercury sealed in the glass tubing of the bulb. They must be disposed of as Household Hazardous Waste (HHW) at an approved site. The Local Agency shall document in the client file that the occupant(s) received the CFL disposal information.

Section 25.0 Refrigerators

Specs TOC

Replacement refrigerators shall be justified using a State approved evaluation of cost-effectiveness where the Savings to Investment Ratio (SIR) is 1.0 or greater. Freezer-only unit replacements are not allowed.

25.1 Document cost-effectiveness

The Local Agency shall document in the client file that the replacement is cost-effective with an SIR of 1.0 or greater, and the method used to determine the SIR.

25.2 Allowable methods to determine SIR

The Local Agency shall use one of the following methods to determine the SIR before replacing a refrigerator:

a. TREAT (Targeted Residential Energy Analysis Tool).

b. Refrigerator Replacement Analysis Tool: See **Exhibit 5.1.6A, *Economic Analysis of Refrigerator Replacement***.

25.2.1 Data logging and data bases

The Local Agency shall use a minimum of 2 hours of data logging information, or data base referrals to determine energy usage of existing refrigerators.

25.3 Replacement refrigerators

Replacement refrigerators shall have the following features:

a. EnergyStar rating.

b. Automatic defrost.

Replacement refrigerators shall not have extra features such as door ice, through-the-door water dispensing, or automatic icemakers.

Exceptions:

a. A non-EnergyStar refrigerator may be installed provided the SIR for the non-EnergyStar model is demonstrated to be higher than the SIR for the EnergyStar model.

b. If the refrigerator you are replacing is like-for-like and still meets the SIR of 1 or greater. This is to include the cost of disconnect and reconnection of existing water supply only.

c. Replacement refrigerators must meet the following criteria:

1. EnergyStar or better energy efficiency. A non-EnergyStar refrigerator may be installed provided the SIR for the non-EnergyStar model is demonstrated to be higher than the SIR for the EnergyStar model.
2. Top-mount freezer (two door models).
3. Models with no extra features such as door ice, through door water dispensing, or automatic icemakers. A like-for like replacement refrigerator may be installed if it still meets the SIR of 1 or greater. This is to include the cost of disconnect and reconnection of existing water supply only.
4. Based on the size and needs of the family.

25.4 Refrigerator sizing

The smallest size refrigerator that is practical for each household shall be installed. The following guidelines shall be used:

Family of 1 - 2	15 cubic foot
Family of 3 - 4	18 cubic foot
Family of 5 or more	21 cubic foot

25.5 Client agreement

The Local Agency and client shall have a written agreement that is documented in the client file that the refrigerator being replaced will be removed by the Local Agency. Additional refrigerators or freezers, whether working or not, may be removed upon written agreement between the owner and the Local Agency.

25.6 Establishment of ownership

If the refrigerator is installed in a rental unit, the ownership of the existing and the replacement refrigerator shall be established, and documented in the client file. This shall be done before the replacement refrigerator is installed.

25.7 Disposal of removed refrigerators

The Local Agency shall remove the old refrigerator from the property and dispose of it at an EPA-approved disposal site that reclaims the refrigerant. The client file will contain documentation of the proper disposal from the disposal facility, or a statement signed by a commercial vendor indicating that the vendor will dispose of the refrigerator at an approved disposal site that reclaims the refrigerant.

Section 26.0 Mobile Homes

Specs TOC

The local agency shall weatherize all mobile homes in accordance with the State of Washington Weatherization Manual (Policies and Procedures, Specifications and Standards, and Supporting Documents). The more specific requirements take precedence over the general requirements. The following mobile home specific requirements (Section 26 Mobile Homes) take precedence over the general requirements: *Specifications and Standards, Sections 1 through 25*.

26.1 Underfloor insulation

Contractors blowing insulation into the cavity between rodent barrier and sub-floor shall install fiberglass insulation only, at a density of 1.5 pounds per cubic foot (lb/cu.ft.). Insulation shall be in substantial contact with the underfloor. Open floor cavities shall be insulated per **Section 8, *Crawlspace/Underfloor/Perimeter Insulation***.

The belly board (flexible rodent-barrier) must be complete and intact in areas where insulation is blown-in. The rodent barrier shall be supported as required to avoid sagging.

Holes in the rodent barrier shall be patched with like or similar materials that are stitch stapled or mechanically fastened and glued to the existing rodent barrier with adhesive, mastic, or caulk.

Stitch staples shall be at a minimum size 9/16, type galvanized or stainless, and gauge 4M. Patches must be sealed with caulk, glue, mastic, or adhesive (peel & seal) and have a minimum number of 4 staples per patch.

Holes in the rim joist used to install insulation in the cavity between the belly board and sub-floor shall be plugged with wooden plugs glued in place with an exterior-rated sealant.

26.1.1 Skirting

Repair or replacement is considered a weatherization related repair and must be included in the package of measures and meet an SIR of 1 or greater. If skirting is not present all insulation and ductwork installed by the program must be protected.

26.2 Ceiling insulation

Installation of ceiling insulation in crowned and flat roofs shall be installed to a minimum R-38 or the highest practical R-value, filling the entire attic cavity. Refer to ***Energy OutWest Weatherization Field Guide*, *Section 6.4***.

26.2.1 Ventilation

Attics with pitched roofs where the insulation does not fill the cavity shall be ventilated per **Section 6, *Attic/Ceiling Insulation***.

26.2.2 Patching insulation access holes in roofing

Contractors shall patch all holes created to install attic insulation. Holes shall be patched to prevent intrusion of bulk moisture. Patches on roofs shall be installed in a manner that ensures they are as durable as and last the life of the existing roofing.

Access holes created to install attic insulation shall not compromise the structural integrity of the roof system.

26.3 Exterior roof insulation

Contractors shall determine that the ceiling/roof system is structurally adequate to support the combined weight of all materials imposed on the ceiling/roof system including insulation that may be installed in the attic cavity.

26.3.1 Attic cavity fill

Contractors shall fill the attic cavity between the ceiling and roof with insulation prior to applying exterior ceiling/roof insulation.

26.3.2 Insulation and membrane

Contractors shall install a minimum 2 inches of rigid extruded polystyrene or polyisocyanurate insulation covered with an EPDM or PVC membrane.

26.3.3 Securing insulation boards

Contractors shall secure insulation boards to the roof structure using fender washers with a minimum diameter of 1 inch, and screws long enough to penetrate the roof trusses a minimum of 1 inch.

Screws shall be attached to the roof trusses every 30 inches. The maximum distance between screws is 30 inches.

Screw heads shall not project above the rigid board insulation.

26.3.4 Roof membranes

Roofing membranes shall cover the existing roof and extend down the wall. The membrane shall be secured to the wall in a manner that prevents water intrusion into

the wall cavity. The roofing system shall be sufficiently rigid and sloped to prevent "ponding" or "pooling" of water on roof surface after installation.

26.3.5 Roofing projections

All existing exhaust fan terminations, plumbing vent stacks, and combustion appliance vent stacks must extend through the new exterior roof insulation and terminate in an air-tight and water-tight manner.

a. All combustion appliance vent stacks shall be extended, if necessary, to meet applicable HUD code and appliance manufacturers' specifications for minimum height of the vent stack termination above the new roof level.

b. New vent caps for exhaust fans must not be of smaller diameter than the duct or pipe projecting through roof, must allow free flow of air (i.e., not include a damper system), and must supply a net free ventilation area (NFA) not less than 60% of the size of the duct or pipe (Example: A vent cap installed on a 7 inch diameter bathroom fan exhaust duct must have a minimum diameter of no less than 7 inches, and provide an NFA of no less than 23 square inches).

c. Ducts or pipes must be sealed to the inside of the vent cap to prevent the entrance of exhaust air or gases into the ceiling cavity. Where the existing vent duct or fan housing does not adequately project above the roof surface to allow sealing it to the inside of the new vent cap, add a section of not less than 26 gauge galvanized steel duct of the same diameter as the existing duct or fan housing. The rigid duct section must overlap the existing duct or fan housing by a minimum of 1 inch and not extend above the bottom of the vent openings in the vent cap.

d. Fan/duct extensions must be sealed to the outside of the existing duct or fan housing and to the inside of the vent cap with a continuous bead of silicon caulk.

e. Vent caps for all kitchen exhaust fans must be made of metal and sealed to the fan exhaust duct and roof cap with high temperature silicon.

f. All roof penetrations shall be flashed membrane compatible materials.

26.4 Wall insulation

Mobile home wall insulation can be installed on a case by case basis, where the Savings to Investment Ratio (SIR) is 1 or greater, depending on the type and construction of the mobile home. If installing insulation it should be done in a manner that fills the wall cavity.

26.4.1 Installation

Insulation shall be installed between the exterior side of the existing insulation and the interior side of the exterior wall.

26.4.2 Insulating wall cavities with an existing vapor-retarder

When a vapor-retarder is present on the interior side of the existing insulation, install the new insulation on the exterior side of the existing insulation.

26.4.3 Securing siding

If metal siding panels have been removed or opened to facilitate installation of insulation reinstall panels in a secure manner to prevent panel separation and water intrusion.

Fasteners used for securing wall panels must be gasketed, corrosion resistant, self-tapping screws.

26.5 Exterior water heater closets

Where it is not practical to insulate water heaters the water heater closet exterior door shall be insulated to minimum R-11. The exterior door and interior of the closet shall be air sealed to prevent air infiltration.

26.5.1 Exterior water heater closet with combustion appliance

Exterior water heater closets with a combustion appliance shall have combustion air inlets that meet *International Mechanical Code* standards.

26.6 Mobile Home Airsealing

All considerations from Specifications Section 5 should be included in the air sealing of a mobile home with attention to all accessible marriage lines in a multi-section unit.

Section 27.0 Multi-Family

Specs TOC

The local agency shall weatherize all Multi-Family homes in accordance with the State of Washington Weatherization Manual (Policies and Procedures, Specifications and Standards, and Supporting Documents). The more specific requirements take precedence over the general requirements. The following Multi-Family specific requirements (Multi-Family Supplement) take precedence over the general requirements: *Specifications and Standards, Sections 1 through 25*.

See **Section 2.0, *Energy Audits***

See **Multi-Family Supplement *DRAFT* Guidance**

Department of Commerce
Innovation is in our nature.

Supporting Documents

For Managing theLow-Income Weatherization Program

Supporting Documents - Table of Contents (TOC)

for
United States Department of Energy (DOE)
United States Department of Health and Human Services (HHS)
Bonneville Power Administration (BPA)
and
Matchmakers (MM)

Prepared By:
Washington State Department of Commerce
Community Services and Housing Division

April 2009 Edition

(with 2010 through 2014 revisions)

WEATHERIZATION WORKS

April 2009
(Revised April 2013)

Supporting Documents

for Managing theLow-Income Weatherization Program

Acronyms	July 2012
Definitions	July 2014

Exhibits

Chapter 1 Eligible Clients and Dwellings

Exhibit 1.1.1A	Percent of Native American Low-Income Households	April 2009
Exhibit 1.4.1A	Wx Program Property Owner/Agency Agreement	April 2009
Exhibit 1.4.1B,	Wx Program Property Owner/Agency Agreement For Multi-Family Buildings	April 2009
Exhibit 1.4.1C	Owner-Agency Agreement & The Wx Assistance Program	July 2014
Exhibit 1.4.1D	Tenant Rights & The Wx Assistance Program	April 2009
Exhibit 1.7A	Wx Assistance Program Application for Shelters, Group Homes, and Transitional Facilities	July 2012
Exhibit 1.9A	Historic Preservation Checklist	July 2013

Chapter 2 Income Eligibility Standards and Documentation

LIHEAP Ex 501	Household Information Form	April 2009
Exhibit 2A	Income and Residence Verification Checklist	April 2009
Exhibit 2B	Household Member and Income Information Form	April 2009
Exhibit 2C	Sample Wx Program Utility Information Release Waiver	April 2009
LIHEAP Ex 504D	Declaration of No Income	April 2009

Chapter 3 Verification of Residence and Household - No Exhibits

Chapter 4 Complaints and Dispute Resolution

Exhibit 4A	Sample Dispute Resolution Flow Chart	April 2009
Exhibit 4B	Client Complaint Form	April 2009
Exhibit 4C	Service Review Request	April 2009
Exhibit 4D	Dispute Resolution Fact Sheet	April 2009
Exhibit 4E	Dispute Resolution Resources	April 2009

Chapter 5 Providing Weatherization Services

Exhibit 5.1A	Priority List of Weatherization Measures	July 2012
Exhibit 5.1A(2)	General Heat Waste Reduction List	July 2014
Exhibit 5.1B	WxM Ancillary Items, WRR and H&S	July 2014
Exhibit 5.1.3A	Solid Fuel Burning Appliance Systems Supplemental Audit	April 2009
Exhibit 5.1.6A	Economic Analysis of Refrigerator Replacement	April 2009
Exhibit 5.1.8A	Certificate of Insulation	April 2009
Exhibit 5.3.1A	Combustion Safety Test Report	July 2014
Exhibit 5.3.1A(2)	Daily In-Progress Combustion Safety Test Report	July 2014
Exhibit 5.3.1B	Combustion Safety Technical Support Document	July 2013
Exhibit 5.5A	Weatherization Deferral Form	April 2009
Exhibit 5.S1	MOLD Assessment and Release Form	April 2009
Exhibit 5.S2	Pollution Source Survey	April 2009
Exhibit 5.S3A	Diagnostic Test Report	July 2013
Exhibit 5.S3B	Diagnostic Technical Support Document	July 2013
Exhibit 5.S5	ASTM E 84, Flame Spread and Smoke Development	April 2009
Exhibit 5.S6	Deleted	July 2013
Exhibit 5.S7A	Work Order for Cleaning and Tuning Electric Furnaces	April 2009
Exhibit 5.S7B	Work Order for Cleaning and Tuning Gas Furnaces	April 2009
Exhibit 5.S7C	Work Order for Cleaning and Tuning Oil Furnaces	April 2009
Exhibit 5.S7D	Work Order for Oil Retrofit	April 2009
Exhibit 5.S8	Safety Label for Domestic Water Heaters	April 2009
Exhibit 5.S9	Cost Effective Guidelines Example	April 2009
Exhibit 5.S10	Standards for Weatherization Materials	April 2009

Chapter 6 Allowable Costs

Exhibit 6	Fund Matrix	July 2014
Exhibit 6.1	Wx Program Fiscal Definitions	July 2012
Exhibit 6.5A	Training and Technical Assistance Expense Form	April 2009
Exhibit 6.5B	Peer Exchange Proposal Form	April 2009
Exhibit 6.6A	Equipment Purchase Request/Approval Form	July 2012
Exhibit 6.6B	Equipment Reserve Fund Application	April 2009

Chapter 7 Quality Assurance

Exhibit 7.4.2	Contract Expenditure Benchmarks	July 2014

Chapter 8 Program Management, Administration, and Reporting

Exhibit 8.3A	Sample Weatherization Contract Face Sheet	April 2009
Exhibit 8.3B	Example Exhibit A (Applicable Terms and Conditions)	April 2009
Exhibit 8.3C	Sample Weatherization Contract Amendment Face Sheet	April 2009
Exhibit 8.3D	Signature Authority	April 2009
Exhibit 8.4A	Certification Regarding Debarment, Suspension, or Ineligibility and Voluntary Exclusion –Primary Tier Covered Transactions	April 2009
Exhibit 8.4.1A	Property Owner Release Form	April 2009
Exhibit 8.5A	Federal Certification Regarding Lobbying	April 2009
Exhibit 8.6A	Working Capital Advance Example One	April 2009
Exhibit 8.6B	Working Capital Advance Example Two	April 2009
Exhibit 8.6C	Working Capital Advance Example Three	April 2009
Exhibit 8.6D	Working Capital Advance Example Four	April 2009
Exhibit 8.7A	Sample Wx Program Request for Reimbursement (19-1A)	July 2012
Exhibit 8.8A	Sample Final Contract Closeout Report (Forms 1-6)	April 2009
	Form 1, Budget & Actual Costs Statement	April 2009
	Form 2, Grant Generated Program Income Report	April 2009
	Form 3, Inventory (Pg 1-Equipment; Pg 2-Vehicle Record)	April 2009
	Form 4, Final Expenditure Report & Request for Reimbursement	April 2009
	Form 5, Materials Inventory Transfer Voucher	April 2009
	Form 6, Owner Refunds Received and Expended	April 2009
Exhibit 8.8B	Sample Weatherization Contract Closeout Checklist	April 2009
Exhibit 8.12.1A	Equipment/Vehicle Disposition Form	April 2012

Chapter 9 Health and Safety

Exhibit 9.3	Mechanical Ventilation Worksheet (MVW)	July 2014
Exhibit 9.3(2)	MVW – Intermittent Fan Flow Calculator	July 2014
Exhibit 9.3A	MVW – Technical Support Document	July 2014
Exhibit 9.9	Asbestos Standard Operating Procedures	July 2012

References April 2009

Managing the Low-Income Weatherization Program

Acronyms

A

AAA	American Arbitration Association
ACEEE	American Council for Energy Efficient Economy
ACF	Administration on Children and Families
ANSI	American National Standards Institute

B

BPA	Bonneville Power Administration
BPC	Building Performance Center
BPI	Building Performance Institute

C

CAA	Community Action Agency
CAP	Community Action Program
CAT	Computerized Audit Tool
CFL	Compact Fluorescent Light Bulb
CFR	Code of Federal Regulations
CIAP	Comprehensive Improvement Assistance Program (under HUD)
CO	Carbon Monoxide
CPA	Certified Public Accountant
CTED	Community, Trade and Economic Development (Washington State Department of) now known as Department of Commerce (Commerce)

D

DAHP	Department of Archaeology and Historic Preservation
DOE	Department of Energy (United States Department of)
DRC	Dispute Resolution Center
DSHS	Department of Social and Health Services (Washington State Department of)

E

EOW	Energy OutWest
EPA	Environmental Protection Agency (United States Department of)

F

G

GA	General Assistance
GAO	General Accounting Office

H

H & S	Health & Safety
HHS	Health and Human Services (United States Department of)
HRRP	Home Repair and Rehabilitation Program
HUD	Housing and Urban Development (United States Department of)

I

IAQ	Indoor Air Quality
IGR	Independent Group Residence
IRC	International Residential Code
IRS	Internal Revenue Service (United States Department of)

J

K

L

LIHEAP	Low-Income Home Energy Assistance Program
LSW	Lead Safe Weatherization

M

MM	Matchmakers, formerly Energy Matchmakers (EM)
MVL	Minimum Ventilation Level

N

NEC	National Electrical Code
NHPA	National Historic Preservation Act
NPS	National Park Service

O

O & M	Operations & Maintenance (PSE Program)
OMB	Office of Management and Budget (Federal)
OSHA	Occupational Safety and Health Administration

P

PCR	Peer Circuit Rider
POI	Pollution Occurrence Insurance
PPM	Part-Per-Million
PSE	Puget Sound Energy

Q

R

RCW	Revised Code of Washington

S

SIR	Savings-To-Investment Ratio
SSI	Supplemental Security Income

T

T & TA	Training & Technical Assistance
TANF	Temporary Assistance for Needy Families
TREAT	Targeted Residential Energy Analysis Tools

U

UCC	Uniform Commercial Code
UL	Underwriters Laboratories
USDA	United States Department of Agriculture

V

W

WAC	Washington Administrative Code
WAP	Weatherization Assistance Program
WAPTAC	Weatherization Assistance Program Technical Assistance Center
WISHA	Washington Industrial Safety and Health Act
WPN	Weatherization Program Notice
WWW	World Wide Web
Wx or WX	Weatherization

X

Y

Z

Managing the Low-Income Weatherization Program

Definitions

A B C D E F G H I J K L M N O P Q R S T U V W X Y Z

Please see the Department of Energy's 10 CFR Part 440, Final Rule, for additional definitions.

A

Acceptable Indoor Air Quality

Air toward which a substantial majority of occupants express no dissatisfaction with respect to odor and sensory irritation and in which there are not likely to be contaminants and concentrations to be a known health risk.

Additional Work

Problems observed during monitoring inspections that need to be corrected, such as a plumbing leak that needs repair to protect the under-floor insulation.

Adequate Heat

Heating facilities are considered adequate if they are capable of maintaining a room temperature of 65 degrees F in all habitable rooms and bathrooms when the outside design temperature is reached.

Administration Costs

Costs associated with agency level functions, but not directly associated with a program. These agency level functions include, but are not limited to: planning, budgeting and accounting, and establishment and direction of local agency policies, goals, and objectives.

Agency

Department of Commerce (Commerce), Housing Improvements and Preservation Unit.

Air Conditioning

An air conditioner (often referred to as AC) is a home appliance, system, or mechanism designed to dehumidify and extract heat from an area.

Air Handler

A steel cabinet containing a blower with cooling and heating coils connected to ducts, which transport indoor air to and from the air handler.

Air Sealing

Sealing of the building envelope with materials that stop or prevent air leakage into or through a dwelling unit.

Ambient CO Level

The level of CO measured within the dwelling unit, but not within the exhaust flue.

Ancillary Items

Items necessary for the proper installation of weatherization materials. Ancillary item refers to small items such as hardware, nails and screws, other fasteners, adhesive, sealant, etc, and not large-ticket items such as dry walling, roof and floor decking, rough framing, etc. (the latter are incidental repairs). Ancillary items are items required by materials manufacturers, general construction, and WAP field standards to achieve a finished product in a typical installation where no unusual or extensive repairs are needed. The costs of ancillary items and installation are to be included within the cost of the individual Wx Measure (WxM) when calculating the SIR for the individual WxM. Although the WAP requires the use of appropriate, durable ancillary materials, standards for ancillary items are typically not listed in 10 CFR Part 440, Appendix A.

Arbitration

Submission of a dispute to one or more impartial persons for a final and binding decision. Through contractual provisions, the parties may control the range of issues to be resolved, the scope of relief to be awarded, and many procedural aspects of the process. Under *Chapter 7.04 RCW*, all arbitrations are final and binding unless there is either arbitrator misconduct or the arbitrator obviously disregards the law.

Asbestos-containing material (ACM)

Any material containing more than one percent (1%) asbestos.

Auditor

The person that identifies health, safety, durability, and energy conservation issues, problems, or opportunities in buildings.

Average Cost Per Unit (ACPU)

See also *Building Cost*

The DOE adjusted average expenditure limit for Program Year (PY) 2014 is $6987. The "average cost per unit" (ACPU) must be at or below this figure for PY2014 at the end of the project period.

Budget Categories included in DOE ACPU: Weatherization Measures Installed Measure Costs, Weatherization-Related Repair Measures Installed Measure Costs, Program Support Costs (Audit and Inspection costs, Consumer Conservation Education Costs, and the cost to carry out Low-Cost/No-Cost Weatherization activities), and Vehicle and Equipment Costs.

Budget Categories NOT included in DOE ACPU: Administration, Health & Safety Measures, Other Program Operations (Liability Insurance, Leverage Assistance, and Financial Audits), Training and Technical Assistance, and Special Project Costs.

B

Backdrafting

Continuous spillage of combustion gases from a combustion appliance.

Background CO level

The naturally occurring level of CO measured outside of the dwelling unit.

Baffling

Materials used to maintain ventilation openings and minimum clearance requirements.

Base-load Costs

Those energy costs associated with a building's operation excluding costs associated for heating/cooling.

Bathroom

Any room containing a bathtub, a shower, a spa, or a similar source of moisture.

Bathroom ½ (Half-Bath)

A room containing a sink and a toilet. This does not require additional mechanical ventilation.

Bimetal Element

A metal spring, lever, or disc made of two dissimilar metals that expand and contract at different rates as the temperature around them changes. This movement operates a switch in the control circuit of a heating or cooling device.

Blower Door

Building diagnostic equipment used to measure and locate air leaks through windows, doors, and other places in a dwelling unit. It consists of a large board or hood that blocks the front door of the dwelling unit, a powerful fan, and gauges.

Blower Door Test

A test to determine the air leakage in a dwelling unit. It uses a variable-speed fan to pressurize or depressurize a dwelling unit. The pressure difference between the inside and outside air at various fan-induced pressures is measured. These readings are used to determine features such as the leakiness or the natural air change rate of the dwelling unit.

British thermal unit (Btu)

The quantity of heat required to raise the temperature of one pound of water one degree Fahrenheit.

Building Airflow Standard (BAS)

The calculation used to determine the target level of airflow in a dwelling unit that should be achieved by mechanical or natural ventilation at the completion of weatherization, measured in CFM50 (i.e., CFM measured at 50 Pascals pressure difference).

Building Costs

See also *Average Cost Per Unit (ACPU)*

All costs associated to a specific building, including Weatherization and Weatherization-Related Repair Installed Measure Costs and Program Support Costs.

The following costs are NOT included in Building Costs: Administration, Health and Safety Measure Costs, Other Program Costs (Financial Audits, Liability Insurance, and Leveraging Costs), Training and Technical Assistance Costs, and Special Project Costs.

Building Permit

An authorization issued by county, city, or state officials allowing a specific type of construction at a particular location.

Building Shell

A building's exterior envelope, consisting of the walls, floor, and roof of a building.

Building Tightness Limit (BTL)

See Building Airflow Standard (BAS)

Burner

A device that facilitates the burning of a fossil fuel like gas or oil.

By-passes

Holes, openings, and chase-ways typically found around chimneys, plumbing, and electrical penetrations in attics and crawlspaces that allow conditioned air to escape or unconditioned air to enter a dwelling unit.

C

Carbon Monoxide (CO)

An odorless and poisonous gas produced by incomplete combustion.

Ceiling Loading

The amount of weight in pounds per square foot a ceiling is designed to support.

Client File

The file that contains documents, electronic records, or file references specific to the work on an individual dwelling unit. All information must be readily available for monitor, inspector, or auditor review.

Closed Top Dam

A fixture that is dammed with a metal, sheetrock, or other non-combustible material that extends at least 24 inches above the fixture and has a cover over the top that will prevent insulation from entering inside the dammed area.

Closed Unit

A dwelling unit that meets the definition of a *Completed Unit*, all financial transactions are complete, and the file is closed.

Combat Pay

Special pay while serving in a combat zone.

Combustion Air

Air that chemically combines with a fuel during combustion to produce heat and flue gases, mainly carbon dioxide and water vapor.

Combustion Analyzer

A device used to measure steady-state efficiency of combustion heating units.

Combustion Appliances

Any liquid, gas, or solid-fuel burning appliances, including water heaters, wood stoves, ranges, ovens or stovetops, furnaces, boilers, space heaters, fireplaces, fireplace inserts, and gas logs.

Combustion Appliance Zone (CAZ)

The physical area in which the combustion appliance is located; usually contained by a door or an access closure.

Combustion Safety Diagnostic Testing

Use of a digital and calibrated manometer to read pressure differentials and CO levels under a variety of natural and created conditions to assist in diagnosing airflow and draft dynamics in a combustion appliance.

Compact Fluorescent Light Bulb

A light bulb designed to replace screw-in incandescent light bulbs, they are often found in table lamps, wall sconces, and hall and ceiling fixtures of commercial buildings with residential type lights. They combine the efficiency of fluorescent lighting with the convenience of standard incandescent bulbs. Light is produced the same way as with other fluorescent lamps. Compact fluorescent bulbs have either electronic or magnetic ballasts.

Competent Person

In addition to the definition in WAC 296-62-07728, one who is capable of identifying existing asbestos hazards in the workplace and selecting the appropriate control strategy for asbestos exposure, who has the authority to take prompt corrective measures to eliminate them as specified in WAC 296-62-07728. The competent person shall be certified as an asbestos supervisor in compliance with WAC 296-65-030(3) and 296-65-012 for Class I and Class II work, and for Class III and Class IV work involving 3 square feet or 3 linear feet or more of asbestos-containing material. For Class III and Class IV work, involving less than 3 square feet or 3 linear feet, the competent person shall be trained in an operations and maintenance (O&M) course which meets the criteria of EPA (40 CFR 763.92(a)(2)).

Completed Unit

See also *DOE Completed Unit*

A dwelling unit that meets the definition of a *Weatherized Unit*, has passed final inspection and is certified as complete. Units that receive only low-cost/no-cost services may not be counted as completed units in the Weatherization Information Data System (WIDS).

Computerized Audit Tool

Energy use analysis software approved by the Department of Energy for use in determining cost-effective conservation measures.

Conditioned Basement

An intentionally heated or cooled basement.

Consumer Conservation Education Costs

Costs included in Program Support to provide consumer conservation education to clients including, but not limited to, energy efficiency, safety hazards, and the propoer operation of equipment, including the operation, testing, and battery replacement of smoke detectors.

Contractor

Any agency administering the weatherization program and its subcontractors.

Cost-effective

A Savings-to-Investment Ratio (SIR) of 1.0 or greater. See *Savings-to Investment Ratio (SIR).*

D

Damming

Materials used to prevent insulation from spilling or spreading to areas that may cause moisture, combustion, or ventilation problems.

Data Logger

A device that measures energy consumption over a given time period, typically in Kilowatt/hours, and often used to determine the energy consumption of refrigerator and freezer units.

De minimus level

The damaged or deteriorated (i.e.: chipped, peeling, flaking, worn, etc.) area of a given painted surface or component that, when exceeded, triggers the use of lead-safe work practices.

Deficiency

Noncompliance issues that are of secondary concern, such as, small file omissions (no date on form), procedural items that can be quickly or easily corrected, or a finding in work quality that is easily correctable and does not significantly impact the overall results of work performed (for example, failure to wrap the first five feet of water pipe from the water heater).

Depressurize

Cause to have a lower pressure or vacuum with respect to a reference of a higher pressure.

Diagnostic Testing

Use of a digital and calibrated manometer to read pressure differentials under a variety of natural and created conditions to assist in diagnosing airflow and ventilation dynamics in a dwelling unit.

Dilution Air

Air that enters through the dilution device; an opening where the chimney joins to an atmospheric-draft combustion appliance.

Dilution Device

A draft diverter or barometric draft control on an atmospheric-draft combustion appliance.

Direct-vented Combustion Appliance

An ANSI Category I appliance. An appliance that operates with a non-positive vent static pressure and with a vent gas temperature that avoids excessive condensate production in the vent. Combustion air is supplied from outdoors directly to combustion chamber.

Disability

A physical or mental condition that substantially limits one or more major life activities. There are several definitions of disability in the law. Each definition emphasizes some aspects of the condition and is specifically tailored to delineate the scope of a legal right under various public programs. See *Persons with Disabilities.*

DOE Completed Unit

See also *Completed Unit*

A dwelling unit that meets both the definition of a DOE Weatherized Unit and has DOE funds used directly on it must be counted as a DOE Completed Unit.

DOE State Plan

A yearly document prepared for DOE by Commerce that describes the weatherization program and the rules and responsibilities of Commerce and its contractors. The plan is distributed to Contractors and interested parties.

DOE Weatherized Unit

See also *Weatherized Unit*

From WPN 05-1, 2004 (p. 26):

To assist State and local agencies in determining what a DOE weatherized unit is, DOE offers the following definition. A DOE Weatherized unit is: A dwelling unit on which a DOE-approved energy audit or priority list has been performed. As funds allow, the appropriate measures installed on this unit have an SIR of 1.0 or greater, but also may include any necessary energy-related health and safety measures. *The use of DOE funds on this unit may include but are not limited to auditing, testing, measure installation, inspection, use of DOE equipment, vehicles, or DOE provides the training and/or administration. Therefore, a dwelling unit that meets both the definition of a DOE weatherized unit and has DOE funds used directly on it must be counted as a DOE completed unit.*

Note: The above definition is not intended to impede or otherwise cause difficulties to States and local agencies that have entered into a leveraging partnership where other sources of funds are involved. If there is uncertainty in determining how best to account for the completed weatherized units under such an arrangement, contact your respective Regional Office for guidance.

Dominant Duct Leakage Testing

A test performed with the air handler running indicating which is the leakier side of the furnace distribution system (the supply side or the return side).

Draft Diverter

A device located in gas appliance chimneys that moderates draft and diverts down drafts that could extinguish the pilot or interfere with combustion.

Dwelling Unit

A house, including a stationary mobile home; an apartment; or a room in a group residential facility, including a shelter, group home, or transitional facility.

E

Earned Income

Income from salaries or wages.

Elderly Person

A person who is 60 years of age or older.

Electrical Repair

Minor: Electrical repairs required for health and safety with small material costs including, but not limited to: open splices, non-conforming wiring, missing junction boxes (j-box), j-box covers, outlet/switch/blank cover plates, gfci, pigtails, and replacing breaker.

Major: Electrical repairs required for health and safety with large material costs including, but not limited to: upgrading circuits, replacing electrical panel, increasing electrical service, and completely rewiring.

Emergency Shelter

A facility that provides temporary or transitional shelter for homeless people.

Energy Audit

On-site evaluation performed by trained auditors of a dwelling unit's physical and operating characteristics, and its energy uses and processes.

EnergyStar

A Department of Energy designation for products and materials that meet certain established energy efficiency requirements.

Exterior Wall Plate

The bottom framing member of a wall system that lies flat on the exterior perimeter of the foundation and to which wall studs are fastened.

F

Factory-built Housing

Housing designed for human occupancy such as a single-family dwelling. The structure of any room is entirely or substantially prefabricated or assembled at a place other than a building site. It may also include a component. A factory-built house is also referred to as a

"modular" structure. Factory-built housing does not include manufactured (mobile) housing. (See RCW 43.22.450(3)).

Fan Control

A bimetal thermostat that turns the furnace blower on and off as it senses the presence of heat.

Financial Audit Costs

Costs for a financial audit in compliance with **Section 6.8, *Audits***.

Flame-spread Rating

The flame spread index and smoke development index obtained by ASTM E-84 test method for surface burning characteristics of building materials.

Flue

A channel for combustion gases.

G

Gas

Any gaseous fuel.

General Heat Waste Reduction List

A State-approved table that establishes non-insulation energy conservation measures. All measures on this list are presumed cost effective and shall be installed as applicable to the extent funding allows. Total General Heat Waste Reduction material and labor cost must be <$250 per unit. *(See* **Exhibit 5.1A(2), page 2, *General Heat Waste Reduction List***.)

H

Hardwired Detector (or Hardwired Fixture)

A detector or fixture that is directly and permanently wired into a dwelling unit's electrical system.

Health & Safety Measures

Energy-related measures and repairs necessary to eliminate hazards within a structure, which by their remedy, allow for the installation of weatherization materials. Energy-related health and safety measures and repairs are intended to protect building occupants and workers.
See WPN 11-6 pg 2, Guidance

Health & Safety Measures Costs

The Installed Measure Costs for energy-related measures and repairs necessary to eliminate hazards within a structure, which by their remedy, allow for the installation of weatherization

materials. Energy-related health and safety measures and repairs are intended to protect building occupants and workers. *See WPN 11-6 pg 2, Guidance*

Heat Anticipator

A very small electric heater in a thermostat that causes the thermostat to turn off before room temperature reaches the thermostat setting, so that the house does not overheat from heat remaining in the furnace and ducts after the burner shuts off.

Heat Rise

The number of degrees of temperature increase that air is heated as it is blown over a heat exchanger. (Heat rise equals supply temperature minus return temperature.)

Heated Floor Area

The horizontal projection of that portion of interior space which is contained within exterior walls and which is conditioned directly or indirectly by an energy-using system, and which has an average height of five feet or greater.

Heating Degree Day

Each degree that the average daily temperature is below the base temperature (usually 65 degree F) constitutes one heating degree day.

Heating System

Any component of a residential space heating system which distributes heat (duct work, air handler, baseboard, pipes, or radiators), generates heat or controls combustion (furnace, boiler, space heater, or safety controls), ventilates products of combustion (flue, vent pipe, and chimney), and stores and supplies fuel for he heating system (tank or fuel line).

High Limit

A bimetal thermostat that turns the heating element of a furnace off if it senses a dangerously high temperature.

High Residential Energy User

A low-income household whose residential energy expenditures exceed the median level of residential expenditures for all low-income households in the State. The median level is $1030. The annual energy expenditures of high residential energy users are greater than $1030 (>$1030).

House Pressure

The difference in pressure between the indoors and outdoors measured by a manometer.

Household

A group of individuals living in a dwelling unit.

Household with a High-Energy Burden

A low-income household whose residential energy burden (residential expenditures divided by the annual income of that household) exceeds the median level of energy burden for all low-income households in the State. The median level is eight percent (8%). The annual energy burden of households with high-energy burden is greater than eight percent (>8.0%).

I

IC-Rated Fixture

A fixture that is rated and labeled for coverage with insulation.

Inch of Water

Small air pressure differences caused by wind, blower doors, furnace fans, and chimneys are measured in inches of water (in.-H_20) in the American measurement system.

Incidental Repairs

See *Weatherization-Related Repairs*.

Indoor Air Quality

See *Acceptable Indoor Air Quality*.

Input Rating

The rate at which an energy-using device consumes electricity or fossil fuel.

Installation

Physical labor to set product in position or adjust for use. Excludes program support activities such as inspecting and auditing.

Installed Measure Costs

Contractor: Verifiable contractor costs (including material and labor costs) to install Weatherization (Wx) Measures, Health and Safety (H&S) Measures, or Weatherization-Related Repair (WRR) Measures (total contractor bill).

Crew: Verifiable material and labor costs to install Wx Measures, H&S Measures or WRR Measures.

Installer

The person installing a weatherization measure.

Insulation

A material with high resistance (R-value) to heat flow that when placed in the walls, ceiling or floors of a building will reduce the rate of heat flow. In buildings, insulation usually refers to material placed between the interior of a building (in the roof below the waterproofing

layer or in the ceiling of the top floor in the building or between the exterior and interior walls of a building) and the outdoor environment to reduce the rate of heat loss to the environment or heat gain from the environment. Some commonly used materials for home insulation are fiberglass, cellulose, rock wool, and styrofoam. The resistance to heat flow is provided by the many small dead air spaces between the fibers or particles. Insulation comes in a variety of forms; blankets, or batts, foam, boards, or small loose pieces. See *R-value*.

Intermittent Ignition Device

A device that lights the pilot light on a gas appliance when the control system calls for heat thus saving the energy wasted by a standing pilot.

J

Jalousie Windows

A window consisting of several slats of glass that open simultaneously by means of a crank (similar to Venetian blinds).

K

Knee Wall

A short vertical wall in a story and a half dwelling unit.

Knob and Tube Wiring

A wiring method used primarily from 1900 to 1930, characterized by the use of two parallel wires supported on insulated glass or porcelain knobs and tubes.

L

Labor Costs

The cost of construction to install weatherization materials including wage, fringe, and tax.

Lead-Based Paint

Paint that contains one (1.0) milligrams per square centimeter or 5000 micrograms per gram or 0.5 percent lead by weight.

Lead Safe Weatherization (LSW)

Work protocols to reduce and control the amount of lead dust and paint chips generated when disturbing surfaces that may have lead-based paint.

Lead Safe Weatherization Worker (Certified)

Worker that has completed the Lead Safe Weatherization and Work Practices based on the Montana State University (MSU) curriculum, and is a Renovation, Repair, and Painting Certified Renovator.

Leveraged Funds

Funds that are not from the following sources: Bonneville Power Administration (BPA), United States Department of Energy (DOE), Matchmakers (MM), or United States Department of Health and Human Services (HHS).

Leveraging Costs

Funds used for leveraging activities in accordance with the 10 CFR 440.14(b) (9) (xiv), such as utility funds.

Liability Insurance Costs

Costs for insurance policies to cover local agencies for regular liability with General Liability Insurance and specific health and safety issues with Pollution Occurance Insurance (POI).

Local Agency

A community-based agency, nonprofit agency, local government, or tribe that carries out the objectives of the low-income weatherization program.

Low-cost, No-cost

Program term for relatively inexpensive conservation devices that can be easily installed by the weatherization client, (i.e., compact fluorescent bulbs, low-flow shower heads and aerators and door weather-stripping).

Low-cost, No-cost Costs

Costs included in Program Support to carry out Low-Cost/No-Cost weatherization activities providing relatively inexpensive conservation devices that can be easily installed by the weatherization client, (i.e., compact fluorescent bulbs, low-flow shower heads and aerators, and door weather-stripping).

M

Major Measure

Weatherization Measures (energy efficiency measures) listed in the first page of the Priority List. (See **Exhibit 5.1A, *Priority List of Weatherization Measures***)

Make-up Air

Air supplied to a space to replace exhausted air.

Manometer

Measuring device for small gas pressures.

Manufactured Home

A single-family dwelling built according to the United States department of housing and urban development manufactured home construction and safety standards act, which is a

national preemptive building code. A manufactured home also: (a) Includes plumbing, heating, air conditioning, and electrical systems; (b) is built on a permanent chassis; and (c) can be transported in one or more sections with each section at least eight feet wide and forty feet long when transported, or when installed on the site is three hundred twenty square feet or greater.

Master Control System

A living record that tracks inventories of equipment, materials, and supplies including but not limited to: purchases, installations, transfers, and disposals.

Material Costs

The cost of purchase and delivery of weatherization materials.

Materials Inventory

All consumable products purchased for installation of weatherization measures and related repairs that are kept on hand for future use. Materials may include insulation, caulk, wood, glass, heating/ventilation components, hardware, and related supplies.

Mechanical Air Changes

The number of air changes per hour occurring in a dwelling unit as a result of air movement that is assisted with mechanically operated fans.

Mediation

A process whereby a neutral person assists disputing parties in reaching a mutually acceptable resolution. Process is outside the court system and not legally binding. See *Arbitration*.

Minimum Ventilation Level (MVL)

See *Building Airflow Standard (BAS)*

Mobile Home

A factory-built dwelling built prior to June 15, 1976, to standards other than the United States Department of Housing and Urban Development Code, and acceptable under applicable state codes in effect at the time of construction or introduction of the home into the state. Mobile homes have not been built since the introduction of the United States Department of Housing and Urban Development Manufactured Home Construction and Safety Act.

Modular Home

See *Factory-built Housing*.

Mortar

A mixture of sand, water, and cement used to bond bricks, stones, or blocks together.

Multi-Family Dwelling

A building with two or more attached dwelling units. For data collection purposes, dwellings with two to four units will be considered "small"; dwellings with five or more units will be considered "large."

N

Native American

A person who is of American Indian heritage, is of Alaska Native heritage, or a member of an Indian Tribe.

Natural Air Changes

The number of air changes per hour occurring in a dwelling unit as a result of natural air movement (i.e., without any assistance from mechanical fans).

Net Free Area

The area of a vent after that area has been adjusted for insect screen, louvers, and weather coverings. The free area is always less than the actual area.

Noncombustible Material

Materials that pass the test procedure for defining noncombustibility of elementary materials set forth in ASTM E 136.

O

Open-combustion Heater

A heating device that takes its combustion air from the surrounding room air.

Orphaned Natural Draft Water Heater

A natural draft water heater vented into an oversized chimney.

Other Program Operation Costs

The Program Operations costs NOT included in *Building Costs*, including *Financial Audit Costs*, *Liability Insurance Costs*, and *Leveraging Costs*.

Oxygen Depletion Sensor (ODS)

A safety device for unvented combustion heaters that shuts gas off when oxygen is depleted.

P

Pascal

A unit of measurement of air pressure. See *Inch of Water*.

Persons with Disabilities

Persons with any disease, disability, or impairment substantially interfering with their ability to function in society. Any medically determinable physical or mental impairment shall qualify if it has lasted for a continuous period of not less than 12 months, or can be expected to last for 12 months, or result in death.

For further direction, refer to Section 7(6) of the Rehabilitation Act of 1973; Section 1614(a) - Section (3)(A) or 223(d) of the Social Security Act; Section 102(7) of the Developmental Disabilities Services and Facilities Construction Act; or Chapter 11 or 15 of Title 38, United States Code.

Individuals with disabilities are defined as persons with a physical or mental impairment that substantially limits one or more major life activities. People who have a history of, or who are regarded as having a physical or mental impairment that substantially limits one or more major life activities, are also covered. Major life activities include caring for one's self, walking, seeing, hearing, speaking, breathing, working, performing manual tasks, and learning. Some examples of impairments which may substantially limit major life activities, even with the help of medication or aids/devices, are: AIDS, alcoholism, blindness or visual impairment, cancer, deafness or hearing impairment, diabetes, drug addiction, heart disease, and mental illness.

Plenum

The piece of ductwork that connects the air handler to the main supply duct.

Power-vented Combustion Appliance

An ANSI Category IV appliance. An appliance that operates with a positive vent static pressure and with a vent gas temperature that may cause excessive condensate production in the vent.

Prescriptive Air Sealing

Air seal all penetrations bigger than 1/16th inch in diameter. Including but not limited to: top plate, chimneys, ducting, exhaust penetrations, plumbing penetrations, electrical penetrations, recessed lights.

Pressure

A force encouraging movement by virtue of a difference in some condition between two areas.

Pressure Boundary

An air barrier; usually the primary air barrier, most effective when aligned with a thermal boundary.

Pressure Pan Testing

The process of testing air leakage in duct systems using a device to block a duct register while measuring the static pressure behind the device during a blower door test.

Priority Air Sealing

Air sealing that addresses the major and obvious holes in the pressure boundary, typically visible holes in the walls and ceilings of the building envelope.

Priority List of Weatherization Measures

A State-approved table that establishes levels of insulation that may added to and installed in buildings. (See **Exhibit 5.1A, *Priority List of Weatherization Measures***)

Priority List of Non-insulation Measures

See *General Heat Waste Reduction List*. Also see **Exhibit 5.1A(2), page 2, *General Heat Waste Reduction List***.

Private, Federally Subsidized Housing

Units owned by a private developer who received financial benefits from the government to develop the project.

Privately-Owned Subsidized Housing

Units with project-based subsidies.

Program Operations Costs

Costs that can be clearly identifiable with a program. Includes the following costs:
1. Weatherzation Measures; 2. Health and Safety Measures; 3. Weatherzation-Related Repair (Incidental Repair) Measures; 4. Program Support; 5. Vehicle and Equipment; and 6. Other Program Operations (Financial Audit, Liability Insurance, and Leveraging.)

Program Support Costs

Costs directly associated with the Weatherzation program, but not directly associated with a specific Weatherization building, including Audit and Inspection costs, Consumer Conservation Education costs, and cost to carry out Low Cost/No Cost Weatherization activities.

Program File

The file that contains documents required for the administration of a weatherization program.

Public Housing

Units owned by a public housing authority where tenants pay a percentage of income for rent and utilities.

R

Recommendations

Suggestions to assist with compliance of program requirements or to enhance or improve service. These are significantly less serious and may be communicated verbally to the agency during the course of monitoring (on-site technical assistance) or the exit conference.

Recreational Vehicle

A travel trailer, motor home, truck camper, or camping trailer that is primarily designed and used as temporary living quarters, is either self-propelled or mounted on or drawn by another vehicle, is transient, is not occupied as a primary residence, and is not immobilized or permanently affixed to a mobile home lot.

Red Tagged

The authority having jurisdiction determines correction is required, equipment is unsafe to operate, building is unsafe to occupy, stop work order is issued.

Return Air

Air circulating back to the furnace from the house, to be heated by the furnace and supplied to the rooms.

Re-Weatherization

To install or provide materials for a dwelling unit previously weatherized.

R-value

Unit of resistance to heat flow, expressed as temperature difference required to cause heat flow through a unit area of a building component or material at a rate of one (1) heat unit per hour. R-value ranges from 1 to 60 that refers to the insulation's ability to resist heat flow, affected by the insulation's coverage, density, and airflow near and through the insulation and water presence within the insulation. See *Insulation*.

Room Heater

A heater located within a room and used to heat that room.

Roomer/Boarder

An individual who lives in an owner-occupied unit or lease-allowed sublet and meets all of the following conditions: makes one fixed monthly payment that includes rent, heat, and other utility costs; can provide a written lease agreement and proof of boarding payment; and is not related to any household member by blood, marriage, or through adoption. Tenants of housing managed by community-based treatment programs and who meet all of the above conditions shall be considered as roomers/boarders. See *Household*.

S

Savings-to-Investment Ratio (SIR)

The measurement of how many times an energy retrofit pays for itself during an established lifetime. The ratio is the lifetime savings-to-initial investment. SIR of one or greater indicates cost effective investment.

Sealed Combustion Appliance

An appliance that draws all combustion air from outdoors and has a sealed exhaust system.

Sealed Combustion Heater

A heater that draws all combustion air from outdoors and has a sealed exhaust system.

Single-Family Dwelling

A structure containing no more than one dwelling unit.

Site Work

See *Installation*.

Solid Fuel Burning Appliance System

Any appliance that burns solid fuel; for example, coal, pellets, and wood.

Space Heater

A free-standing or self-contained unit that: generates and delivers heat to a local zone; may be permanently installed or portable; and is characterized by a lack of pipes or duct work for distributing heat through the building. Examples of individual space heaters include electric baseboards, electric radiant or quartz heaters, heating panels, gas- or kerosene-fired unit heaters, wood stoves, and infrared radiant heaters.

Space Heating

Heating the living spaces of the home with a room heater or central heating system.

Spillage

The temporary flow of combustion gasses from a dilution device.

Stack Effect

The draft established in a building from air infiltrating low and exfiltrating high.

Stand-Alone Natural Draft Water Heater

A natural draft water heater vented into a properly-sized chimney in accordance with NFPA 31 for oil-fired units, NFPA 54 for gas-fired units, NFPA 58 for propane-fired units and NFPA 211 for solid-fueled units or the venting tables of a chimney liner manufacturer.

Steady-state Efficiency

The efficiency of a heating appliance, after an initial start-up period, that measures how much heat crosses the heat exchanger. A combustion analyzer measures the steady-state efficiency.

Steady-state Operating Condition

The typical operating condition of a heating appliance after it has gone through its initial start up period.

Subcontractor

An individual, partnership, corporation, or other similar entity that installs weatherization measures and carries liability insurance and assurance bonding for all work performed for local agencies. All entities acting as subcontractors must possess either a state contractor's or similar license.

Subsidized Housing

Housing for which the monthly shelter costs of the occupants are determined according to income (such as 30 percent of monthly income) and may cover only rent or include some utility costs.

Supply Air

Air that has been heated or cooled and is then moved through the ducts and out the supply registers of a home.

T

Technical Assistance

Technical information that is exchanged throughout the course of the monitoring visit. TA may be offered in any area being reviewed, however, often times much of this occurs during the course of inspecting the projects.

Thermal Boundary

The plane of a building envelope where insulation is installed to minimize heat flow, most effective when aligned with a pressure boundary.

Training and Technical Assistance Costs

Costs for Training and Technical Assistance in compliance with **Policy 6.5, *Training and Technical Assistance***.

TREAT: Targeted Residential Energy Analysis Tools

A computerized tool that is used during an energy audit that assists in determining cost-effectiveness of anticipated conservation measures for a dwelling unit.

U

Unconditioned Basement
A basement that is intentionally not heated or cooled.

Unintentionally Conditioned Basement
A basement that is heated or cooled unintentionally; typically getting residual heat or cooling from a conditioned space or from conditioning equipment located in the basement.

UV Resistant
Materials that are resistant to degradation caused by ultra-violet light rays.

V

Vapor Retarder
A material that retards the passage of water vapor.

Vent Connector
The vent pipe carrying combustion gases from the appliance to the chimney.

Vent Draft Pressure
The pressure in a vent with reference to either the outside or within combustion appliance zone, measured in Pascals.

Vent Damper
An automatic damper powered by heat or electricity that closes the chimney while a heating device is off.

Venting
The removal of combustion gases by a chimney.

W

Weatherization Audit
The process of identifying energy conservation opportunities in building.

Weatherization Materials
Those materials listed in Appendix A of the DOE WAP for Low-Income Persons Final Rule, 10 CFR Part 440. Materials for Weatherization-related repairs do not have to be listed in Appendix A, but should be at least equal to or better than industry standard practices.

Weatherization Measures

Energy efficiency measures (building shell and equipment) determined to be cost-effective by DOE approved Commerce standards.

Weatherization Measures Costs

The Installed Measure Costs for energy efficiency measures (building shell and equipment) determined to be cost-effective by DOE approved Commerce standards.

Weatherization-Related Repairs (Incidental Repairs)

Repairs necessary for the effective performance or preservation of weatherization materials. Such repairs include, but are not limited to, framing or repairing windows and doors which could not otherwise be caulked or weather-stipped and providing protective materials, such as paint, used to seal materials installed under this program. The cost of WRR (incidental repairs) must be included in the cost of the package of measures installed in a dwelling. See **Section 5.4, *Weatherization-Related Repairs*.**

Weatherization-Related Repairs Costs (Incidental Repairs)

The Installed Measure Costs for repairs necessary for the effective performance or preservation of weatherization materials.

Weatherized Unit

See also *DOE Weatherized Unit*

A dwelling on which a DOE-approved energy audit or priority list has been applied and weatherization work has been completed. As funds allow, the Wx measures installed on this unit have a Savings-to-Investment Ratio (SIR) of 1.0 or greater, but also may include any necessary energy-related health and safety measures.

Weatherization Work Begins

Weatherization work begins on the date of the project's initial energy audit.

Worst-case Depressurization Test

A safety test, performed by specific procedures, designed to assess the probability of chimney back drafting. The specific procedures include a systematic setup of the dwelling unit in a configuration most likely to cause a combustion appliance to back-draft or spill exhaust gasses into the dwelling unit.

Y

Young Children

Children less than six years of age.

Z

Zonal Pressure Testing

The use of pressure measurements to compare relative tightness or hole size of different surfaces and zones of a dwelling unit.

Zone

A room or portion of a building separated from other rooms by an air barrier, not usually an effective air barrier.

Percentage of Native American Low-Income Households

Agency	% By County		Federally Recognized Tribe(s)
Benton-Franklin Community Action Council	Benton	1.55%	
	Franklin	0.87%	
Blue Mountain Action Council	Columbia	0%	
	Garfield	2.25%	
	Walla Walla	1.31%	
Chelan-Douglas Community Action Council	Chelan	3.12%	
	Douglas	2.15%	
City of Seattle Office of Housing-HomeWise Program	City of Seattle		
Clark County Department of Community Services	Clark	2.30%	
Coastal Community Action Program	Grays Harbor	9.01%	Chehalis Confederated/Quinault Nation
	Pacific	4.36%	Shoalwater Bay
Community Action Partnership	Asotin	1.94%	
Community Action Center of Whitman County	Whitman	0.64%	
Community Action Council of Lewis, Mason & Thurston Counties	Lewis	2.80%	
	Mason	8.26%	Skokomish/Squaxin Island
	Thurston	4.04%	Chehalis Confederated/Nisqually
Housing Authority of Skagit County	Skagit	3.89%	Samish Nation/Sauk-Suiattle/Swinomish/Upper Skagit
King County Housing Authority	King	1.17%	Muckleshoot/Snoqualmie
Kitsap Community Resources	Kitsap	4.52%	Port Gamble S'Klallam/Suquamish
Kittitas County Action Council	Kittitas	1.70%	
Klickitat-Skamania Development Council	Klickitat	7.62%	Yakama Nation
	Skamania	6.73%	

Percentage of Native American Low-Income Households

Agency	% By County		Federally Recognized Tribe(s)
Lower Columbia Community Action Council	Cowlitz	4.49%	Cowlitz
	Wahkiakum	2.31%	
Metropolitan Development Council	City of Tacoma		
North Columbia Community Action Council	Adams	0.90%	
	Grant	3.50%	
	Lincoln	5.12%	
Olympic Community Action Programs	Clallam	9.32%	Jamestown S'Klallam/Lower Elwha Klallam/Makah/Quileute
	Jefferson	5.98%	Hoh
Rural Resources Community Action	Ferry	29.74%	Colville Confederated
	Pend Oreille	4.21%	Kalispel
	Stevens	10.90%	Spokane
Okanogan County Community Action Council	Okanogan	15.30%	Colville Confederated
Pierce County Community Action Programs	Pierce	1.78%	Puyallup
Snohomish County Human Services Department	Snohomish	4.07%	Stillaguamish/Tulalip
Spokane Neighborhood Action Programs	Spokane	3.78%	
The Opportunity Council	Island	1.80%	
	San Juan	2.50%	
	Whatcom	5.05%	Lummi Nation/Nooksack
Yakima Valley Farm Workers Clinic	Yakima County S. of Union Gap	5.25%	Yakama Nation
Opportunities Industrialization Center of Washington	Yakima County N. of Union Gap	0.89%	Yakama Nation

Data compiled from the 2000 Census, Households at 125% Poverty.

Weatherization Program
Property Owner/Agency Agreement

[ ] Single Family
[ ] Duplex
[ ] Triplex
[ ] 4-Plex

I, _____ certify that I am the owner/authorized agent
(Owner/Agent)

for the property located at _____ presently rented by:
(Address)

	Tenant(s)	Tenant Rent	Contract Rent (Subsidized Housing Only)
1.	_____	_____	_____
2.	_____	_____	_____
3.	_____	_____	_____
4.	_____	_____	_____

I authorize_____
(Agency)

to make the following weatherization repairs and improvements with the understanding that I will make a cash contribution in the amount of $ _____

_____ _____

_____ _____

_____ _____

I hereby release and pledge to hold harmless the above-named agency and its staff from any liability in connection with the work listed above.

In consideration of the weatherization work to be performed, the parties agree:

1. "Rent" is defined as the tenant's monthly payment to the owner (non-subsidized housing) or the contract rent (subsidized housing).

2. That the rent shall not be raised at any time because of increased value of the rental unit(s) due solely to weatherization assistance.

3. That from the effective date of this agreement, and during a period extending through one (1) year following the date of completion of weatherization work, the amount of rent at all rental units being weatherized will not be raised for any reason. That at the end of this period the rent shall not be raised for an additional period of one (1) year, <u>except</u> to reflect tenants' prorated share of the following expenses actually incurred and documented by the owner: (i) actual increases in property taxes; (ii) actual cost of amortizing improvements to the property (other than weatherization), which are accomplished on or after the date of this agreement and which directly benefit tenants; or (iii) actual increases in expenses of maintaining and operating the property.

4. The provisions of paragraph 3 may be waived by the agency in writing if, and only if, the premises are leased under a state or federal rent subsidy program which restricts the amount of rent the owner may charge, in which case the actual contract rent charged by the owner shall conform to the standards of the rent subsidy program.

5. That from the effective date of this agreement, and during a period extending through three (3) years following the date of completion of weatherization work performed, the owner will not evict, terminate, or institute any court action for possession against any tenant or successive tenant, except for good cause pursuant to the *Unlawful Detainer Statute*, RCW 59.12.030(3)-(5) (e.g. nonpayment of rent, committing waste, maintaining a nuisance) (**http://apps.leg.wa.gov/RCW**)**.**

6. That in the event the owner sells the premises within three (3) years after weatherization work is completed, the owner will comply with one of the two following conditions:

   a. The owner shall repay the agency at the date of sale an amount equal to the percentage of the three (3) year/month period remaining, times the full value of the material and labor as documented by the agency work records, except if sold to low-income tenants; or

   b. The owner shall obtain, in writing prior to sale, the purchaser's agreement to assume the owner's obligations under this agreement.

   The owner shall immediately upon entering into a non-contingent agreement of sale of the premises, so inform both the agency and the tenants, by written notice.

7. That the present tenants, or any successor tenants during the term of this agreement, are the intended beneficiaries of this agreement and shall have a right of enforcement.

8. That for breach of this agreement, damages, where not otherwise specified, may be awarded in accordance with applicable law. The prevailing party in any suit to enforce this agreement shall be entitled to recover his costs and a reasonable attorney's fee.

9. That the agency shall provide a copy of this agreement and a synopsis explaining its terms to the tenants. That the owner shall provide a synopsis explaining the terms of this agreement to subsequent tenants of the above rental units, or to the new and subsequent occupants of rental units vacant on the effective date of this agreement.

10. That the terms of this agreement are incorporated into any other lease or agreement between owner and tenants, and between owner and any successor tenants during terms of this agreement, and if there is any conflict between the provisions of this agreement and provisions of such other lease or agreement, the provisions of this agreement shall govern. With the exception of provisions outlined above, all provisions of the *Washington State Landlord/Tenant Act* (RCW 59.18) (**http://apps.leg.wa.gov/RCW**) and the *Washington State Manufactured/Mobile Home Landlord/Tenant Act* (RCW 59.20) (**http://apps.leg.wa.gov/RCW**) shall apply to the owner(s) and tenant(s).

11. That provisions of this agreement are severable. If any provision of this agreement is found invalid, such finding shall not affect the validity of this agreement as a whole, or any part or provision hereof other than the provision so found to be invalid.

12. Failure of the agency to enforce the agreement upon breach by the owner shall not be construed as a waiver of the agency's right to enforce the agreement.

Signed: _____ Date: _____
(Owner/Authorized Agent)

Address: _____ Phone: _____

Approved by: _____ Date: _____
(Agency Representative)

Weatherization Program
Property Owner/Agency Agreement for
Multi-Family Buildings

I, _____, certify that I am the owner/authorized agent
(Owner/Agent)

for the property located at

_____

I authorize the

_____
(Agency)

to make weatherization repairs and improvements as determined by an energy audit of the building. I will make cash contributions in the amount of $ _____ .

I hereby release and pledge to hold harmless the above-named agency and its staff from any liability in connection with the weatherization work.

In consideration of the weatherization work to be performed, parties agree:

1. "Rent" is defined as the tenant's monthly payment to the owner (non-subsidized housing) or the contract rent (subsidized housing).

2. That the rent shall not be raised at any time because of any increase in the value of the rental units due solely to weatherization assistance.

3. That the owner/agent will submit a current rent schedule prior to completion of weatherization work upon request of the agency.

4. That during a period extending through one (1) year beginning on the date of agency certified completion of weatherization work, the amount of rent, as established by the rent schedule submitted, will not be raised for any reason for any building tenant.

   That at the end of this one-year period, rent shall not be raised for an additional period of one (1) year, <u>except</u> to reflect the tenants' prorated share of the following expenses actually incurred and documented by the owner/agent:

   a. Actual increases in property taxes.

b. Actual costs of amortizing improvements to the property (other than weatherization), which are accomplished on or after the date of this agreement and which directly benefit the tenants.

c. Actual increases in expenses of maintaining and operating the property.

5. The provisions of paragraph 4 may be waived by the agency in writing if, and only if, the premises are leased under a state or federal rent subsidy program which restricts the amount of rent the owner may charge, in which case, the actual contract rent charged by the owner shall conform to the standards of the rent subsidy program.

6. That from the effective date of this agreement, and during a period extending through three (3) years following the date of completion of the weatherization work performed, the owner will not evict, terminate, or institute any court action for possession against any tenant or successive tenant, except for good cause pursuant to the *Unlawful Detainer Statute,* RCW 59.12.030(3)-(5) (e.g. nonpayment of rent, committing waste, maintaining a nuisance) **(http://apps.leg.wa.gov/RCW)**.

7. That in the event the agency determines that the owner\agent has violated the terms of this agreement, the owner\agent shall repay the agency the full value of materials and labor as documented by agency work records.

8. That in the event the owner sells the premises within three (3) years after weatherization work is completed, the owner will comply with one of the two following conditions:

   a. The owner shall repay the agency at the date of sale an amount equal to the percentage of the three (3) year/month period remaining, times the full value of the material and labor as documented by agency work records, except if sold to low-income tenants.

   b. The owner shall obtain in writing prior to sale the purchaser's agreement to assume the owner's obligations under this agreement.

   The owner shall immediately upon entering into a non-contingent agreement of sale of premises, so inform both the agency and tenants by written notice.

9. That present tenants, or any successive tenants during the term of this agreement, are the intended beneficiaries of this agreement and shall have a right of enforcement.

10. That for breach of this agreement, damages, where not otherwise specified, may be awarded in accordance with applicable law. The prevailing party in any suit to enforce this agreement shall be entitled to recover costs and a reasonable attorney's fee.

11. That the agency shall provide a copy of this agreement and a synopsis explaining its terms to the tenants. That the owner shall provide a synopsis explaining the terms of this agreement to subsequent tenants of the above rental units, or to the new and subsequent occupants of rental units vacant on the effective date of this agreement.

12. That the terms of this agreement are incorporated into any other lease or agreement between owner and tenants, and between owner and any successor tenants during the terms of this agreement, and if there is any conflict between the provisions of this agreement and the provisions of such other lease or agreement, the provisions of this agreement shall govern. With the exception of the provisions outlined above, all provisions of the *Washington State Landlord/Tenant Act* (RCW 59.18) **(http://apps.leg.wa.gov/RCW)** and the *Washington State Manufactured/Mobile Home Landlord/Tenant Act* (RCW 59.20) **(http://apps.leg.wa.gov/RCW)** shall apply to owner(s) and tenant(s).

13. That the provisions of this agreement are severable. If any provision of this agreement is found invalid, such finding shall not affect the validity of this agreement as a whole, or any part or provision hereof other than the provision so found to be invalid.

14. Failure of the agency to enforce the agreement upon breach by the owner shall not be construed as a waiver of the agency's right to enforce the agreement.

Signed: _____ Date: _____
(Owner/Authorized Agent)

Address: _____ Phone: _____

_____

Approved by: _____ Date: _____
(Agency Representative)

Reason for the Agreement

The Agreement ensures the tenant receives the full benefit of the energy-saving measures installed.

Saving energy is everyone's responsibility!

Space and water heating are the two largest residential energy users.

To save energy:

- Water heaters should be set at 120 degrees (120° Fahrenheit).
- Furnaces and other heating systems should be checked annually to ensure efficient operation.
- Trees and vegetation that are touching or hanging over a building can create moisture problems that will damage the structure over time. Be sure to trim trees and shrubs and keep leaves, moss, and other debris off the roof and out of gutters and downspouts.

Everyone is a winner in a weatherization partnership!

To find out more about the Weatherization Assistance Program, contact your local community action agency, housing authority, or local government for information.

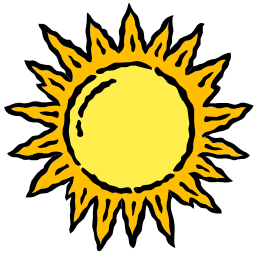

Keep this brochure with your lease or rent contract.

Printed by

State of Washington
Department of Commerce
Housing Improvements and Preservation Unit
PO Box 42525
Olympia Washington 98504-2525

Exhibit 1.4.1C

Owner/Agency Agreement & The Weatherization Assistance Program

Owner/Agency Agreement & The Weatherization Assistance Program

Your role as owner in an energy-saving partnership

As the owner of residential rental property, you have an opportunity to weatherize your property by joining a partnership with your local community action agency, housing authority, or local government agency.

By joining a partnership, the cost of completely weatherizing your property will be greatly reduced.

The Weatherization Assistance Program is designed to provide funds for income-eligible tenants. With your assistance, weatherization measures can be installed that will increase the value of your property without raising the property tax.

In addition, your tenants will benefit through greater comfort and reduced utility costs, and your investment will last for years.

About the Weatherization Assistance Program

The Weatherization Assistance Program is a state and federally funded program managed locally by community action agencies, housing authorities, or local government agencies.

The program provides professional energy management through:

- Building energy analysis
- Attic insulation
- Crawl space insulation
- Sidewall insulation
- Furnace repair or replacement
- Heating duct sealing and insulation
- Water heater and water pipe insulation
- Weatherstripping and caulking
- Other draft reduction and energy-saving measures

All rental units are eligible, whether single family homes or apartments, as long as the occupants are income-eligible.

Prior to weatherization, federal law requires that the weatherization agency and the owner of the rental property sign an agreement. The agreement, known as

The Owner/Agency Agreement, has the following provisions:

1. The rent you charge your tenants cannot be increased for any reason for a period of one year following completion of the weatherization work
2. During the second year after the weatherization work is completed, rent can only be increased for the following reasons:
   - To recover costs related to property tax increases
   - To recover the actual cost of improvements to the dwelling, other than weatherization, that are performed after weatherization is completed and which directly benefit the tenants.
   - To recover the cost associated with an increase an in operation and maintenance.
3. For a period of three years after weatherization is completed, your tenant shall not be evicted, except for good cause, such as
   - Failure to pay rent
   - Damaging property
   - Creating a nuisance or violating any terms of the rent agreement
4. If the property is sold within three years from the date weatherization is completed, one of the following applies, the seller must:
   - Pay back the cost of weatherization on a pro-rated basis. OR
   - The new owner must accept full responsibility and enter into and sign a new Owner/Agency Agreement.

Living in a weatherized home

Now that your home has been weatherized, don't waste energy. Space and water heating are the two largest residential energy users.

To save energy:

Setting your thermostat at 68° Fahrenheit will save energy. If you feel cool, wear a sweater or dress in layers

If you are too warm, turn down the heat. Don't open a door or window to cool down.

At night, cover the windows. This will help keep the heat in.

Furnaces and other heating systems should be checked annually to ensure efficient operation.

Storing boxes and things on top of the insulation will reduce its ability to keep you warm. Make sure the insulation stays the way it was put in.

Water heaters should be set at 120 degrees (120° Fahrenheit).

Saving energy is saving money!

For more information on how to save energy, contact your local community action agency.

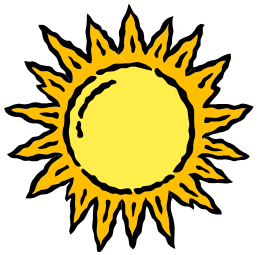

Keep this brochure with your lease or rent contract.

Printed by

State of Washington
Department of Commerce
Housing Improvements and Preservation Unit
PO Box 42525
Olympia Washington 98504-2525

Exhibit 1.4.1D

Tenant Rights & The Weatherization Assistance Program

Tenant rights and the Weatherization Assistance Program

Congratulations!

Your home is about to be weatherized. The addition of insulation and other energy-saving measures will make your home more comfortable and save you money!

Know your rights

The Weatherization Assistance Program is designed to benefit you. Most, if not all, of the materials and labor to weatherize your home are being supplied free of charge to the owner. In return for this free service, the owner has agreed to the following items:

No Rent Increase – The owner cannot raise your rent for any reason for a period of one year from the time the weatherization work has been completed.

During the second year after your home has been weatherized, the owner can only raise your rent for the following reasons:

1. Actual increases in property taxes
2. Actual cost of improvements (other than weatherization) to the dwelling that directly benefits you, the tenant; and
3. Actual increases in cost of maintenance and operations of the property.

Evictions – Beginning on the date the owner signs the agreement to weatherize your home, and for three years after, the owner cannot evict you, or attempt to evict you, except for good cause, such as failure to pay rent, violating any provision of the lease or rent agreement, damaging property or creating a nuisance.

Sale of Property - If the owner sells the property within three years after the weatherization work is completed, the owner must either get the new owner to accept the agreement and protect your rights as stated above, or pay back the cost of weatherization.

If you need help

If you feel the owner is not following the agreement as explained, contact your local legal services office, community action agency, or the agency that did the weatherization work. They may be able to help you.

Remember…

The owner has signed an agreement (Property Owner/Agency Agreement) in order to have your home weatherized. The agreement states that:

- Your rent will not be increased for one year for any reason.
- For one additional year, your rent can only be increased for specific reasons.
- For three years, you cannot be evicted except for good cause.
- If the property is sold, your rights will be protected as explained, or you will be notified that the new owner is buying back the weatherization.

Weatherization Assistance Program
Application for Shelters, Group Homes, and Transitional Facilities

Agency Use Only

Date: _____ *Agency:* _____ *County:* _____

Name of Facility: _____

Applicant/Operator's Name: _____

Facility Phone Number: _____

Address of Facility: _____

City, State, Zip: _____

Owner(s) or Organization Name: _____

Organization Phone Number: _____

Owner/Organization Address: _____
(If different from above)

City, State, Zip: _____

Name of Designated Official: _____

Title of Official: _____

Housing Type (Check One):

Single Unit ☐ Multi Unit ☐ Total # Eligible Units: _____

Heating Fuel - Main Source of Heat (Check One):

Electric ☐ Oil ☐ Gas ☐ Wood ☐ Other _____

I certify that the information I have provided on this application is accurate to the best of my knowledge. I further certify that the incomes of the persons/families residing in the facility of the organization I represent are at or below 200 percent of federal poverty guidelines or 60 percent of the state median income, whichever is greater. I have submitted a letter attesting to these facts and have included a copy of the organization's income guidelines or a copy of the organization's mission statement in lieu of individual resident income verification. If I have knowingly provided false information which results in receiving assistance for which the organization is not eligible, I may be subject to criminal prosecution.

I further understand that I may file a grievance for either of the following reasons:

1. The application was not acted upon within a reasonable time.

2. The application was denied and I think the facility is eligible to be weatherized under this program.

I also agree that in consideration of weatherization work to be performed, the rent, charges, or fees charged to the occupants of the property being weatherized will not be increased because of any increase in the value of the property due solely to weatherization assistance.

_____ _____

(Applicant/Operator's Signature) *(Date Signed)*

The current operation of the property as a _____ , which serves low-income people, shall continue for a period of ____ years. In the event that I sell the property within ____ years after weatherization work is completed, or if the property ceases to be used as a _____ , I will comply with one of the two following conditions:

1. I will repay the agency at the date of sale or at the date of discontinuance an amount equal to the percentage of the _____ year/month period remaining, times the full value of material and labor as documented by agency work records; or

2. I will obtain in writing prior to sale the purchaser's agreement to continue operating the property as a _____ for the remaining term.

_____ _____

(Property Owner's Signature) *(Date Signed)*

Historic Preservation Checklist

Step 1. Does client's scope of work include ground altering activities?

☐ No: Proceed to Step 2.

☐ Yes: Complete **DAHP *EZ-1*** Project Review Sheet.

Step 2. Does the project include conversion of existing properties or demolition, repair, or rehabilitation of a home 45 years or older?

☐ No: STOP here. Historic preservation regulations do not apply.

☐ Yes: Complete **DAHP *EZ-2*** on-line Historic Property Inventory process and submit to them for comment.

Step 3. If DAHP requests an EZ-3 form, make note of submittal date. DAHP has 30 days to review form submittals. If you have not heard from DAHP in 2 weeks, please call for a status report.

Step 4. Make two copies of this Checklist, applicable DAHP forms, response letters, and documentation. Place one copy in the client file and mail one copy to the Commerce Representative listed on the Grant Face Sheet.

WASHINGTON STATE LIHEAP HOUSEHOLD INFORMATION FORM

Exhibit 501

Agency	Primary SSN	❑ EAP **OR** ❑ Emergency EAP ❑ Other Emergency Services (OES)	File #
_____	___ ___ ___-___ ___-___ ___ ___ ___		_____ (optional)
County: _____	**Secondary SSN** ___ ___ ___-___ ___-___ ___ ___ ___	❑ WAP (interested in WX?) ❑ Tribal Member ❑ Received Food Stamps ❑ Heat with rent ❑ Received EAP last program year	Household Members (voluntary) # of people in household who are: _____ 0 – 2 yrs _____ 60+ yrs _____ 3 – 5 yrs _____ Disabled _____ 6 – 17 yrs _____ MSFW
Certification Date _____	**Secondary Applicant:** _____ (Last Name) _____ (First Name)		

Section A:

MAILING ADDRESS ↓ **RESIDENCE ADDRESS** ↓ ***(if different)***

Primary Applicant: _____ (Last Name) _____ (First Name) _____ (Middle Initial)

Mailing Address: _____ **Residence Addr:** _____

City, State, Zip: _____ **Residence City, Zip:** _____

Phone: (_____) _____ - _____ **Msg. Phone:** (_____) _____ - _____ **Lived at Residence:** _____ yrs _____ mos.

Housing Status:	Housing Type:	Primary Heat Source:	Income/Benefits:	Total # People in Household:
1 ❑ Own/buy 2 ❑ Subsidized 3 ❑ Rental 4 ❑ Rm/Brdr 5 ❑ Temp Hsg. **$/mo. $**_____	1 ❑ 1 - 3 Fam 2 ❑ 4+ Fam 3 ❑ Hi-Rise 4 ❑ Mobile 5 ❑ RV	1 ❑ Electric 4 ❑ Oil 2 ❑ Nat Gas 5 ❑ Wood 3 ❑ Propane 6 ❑ Coal # of Bedrooms: _____	1 ❑ SSI 5 ❑ Social Security 2 ❑ TANF 6 ❑ Unempl. Comp. 3 ❑ GAU 7 ❑ Earned Income 4 ❑ VA 8 ❑ Pension 9 ❑ Other	_____ **Household's Monthly Income:** $_____.00

Voluntary Data: **Annual Heat Cost $**_____ ❑ Back Up Heat Cost ❑ Used Surrogate Data **Total Energy Use $**_____

Female Primary Wage Earner? ❑ Yes ❑ No

_____Male

_____Female

Ethnicity
___Hispanic or Latino
___Not Hisp. or Latino

Race
___ American Indian or Alaskan Native
___ Black or African American
___ Native Hawaiian or Pacific Islander
___ Asian
___ White
___ Multi-Racial

____Target Group #1
____Target Group #2

Section B: EAP

Staff: _____ P.O.# _____

HOUSEHOLD ELIGIBILITY AMOUNT: $ _____ . _____

Payment to Vendor(s) ↓ *Direct Pay to Applicant* ➔ $ _____ . _____

#1: _____ Acct. # _____ $ _____ . _____

#2: _____ Acct. # _____ $ _____ . _____

TOTAL PAID TO DATE: $ _____ . _____

Section C: OES

Staff: _____ P.O.# _____

Heat system repairs/replacement: Vendor # _____ $ _____ . _____

Vendor # _____ $ _____ . _____

Other repairs/services: Vendor # _____ $ _____ . _____

Vendor # _____ $ _____ . _____

TOTAL SERVICES PROVIDED: $ _____ . _____

I certify that I have provided and reviewed the above information, which is accurate to the best of my knowledge. I understand that I may be subject to criminal prosecution if I have knowingly provided false information. I further understand that I may request a Fair Hearing if the provision of the above information is not acted on to determine my eligibility within a reasonable time or if I do not receive benefits for which I feel I am eligible. I also give my permission for this agency and Washington State Department of Commerce (Commerce) to request/release necessary information that may result in my receiving benefits from this assistance request. I further give the above listed heating vendor(s) permission to establish a line of credit, and/or to release my account information to this agency or Commerce for current and future data analysis and eligibility determination. I understand that provision of my social security number is necessary to avoid duplicate energy assistance benefit payments to the same applicant household and may also be used for income verification (including Employment Security Unemployment Insurance and DSHS Food Stamp benefits). I hereby authorize energy program staff to use my social security number for those purposes only.

Applicant Signature: _____ **Date:** _____

Income and Residence Verification Checklist

I certify that I have seen the following documentation for:

_____
Head of Household

_____
Applicant Address, City, State, Zip

_____ _____
Agency Representative Date

Income Documentation	Source of Verification
Pay stubs for all earned income	
Employer statement and phone number	
Pensions/retirements	
Veteran's benefits	
Educational grants	
Interest	
L & I statement	
Divorce decree(s)	
Child support received/paid	
TANF	
GAU	
SSI	
Social Security	
Bank statement/award letter for months of:	
Other	
Residence Documentation	**Source of Verification**
Deed/title	
Lease/rental agreement	
Subsidized housing lease	
Tax statement	
Other	

Household Member & Income Information Form

List all immediate members of household, their source of income, and gross amount each member received for each month listed:

1. _____ 2._____ 3._____

DSHS income verified? **(Y N)** Date: _____ Reviewer:_____

Household Members	Source of Income	Gross	Amount	Per Month	Minus 10%	Minus 15%	Minus 20%	Gross Amount	Adjusted Gross Amount	Docts.
Name:		$	$	$						
Name:		$	$	$						

Children's Names:	Age	Children's Names:	Age	Children's Names:	Age
1.		3.		5.	
2.		4.		6.	

***** *If client has more than six children please use back of this form.*

Total gross income:_____ = _____ the household's average monthly income.

Number of months documented: _____

I certify that the above information I have provided is a complete and accurate list of all household members and their income for the period, and _____. I understand that I am signing this form under penalty of criminal prosecution if I knowingly give false information resulting in payment to which I am not entitled.

_____ _____

Applicant's Signature Date

Sample Weatherization Program
Utility Information Release Waiver

Section A: Applicant Information

Primary Applicant: _____
(Last Name) (First Name) (Middle Initial)

Mailing Address: _____

Mailing City, State, ZIP: _____

Phone: (_____) _____

Residence Address: _____

Residence City, State, Zip: _____

Name on utility account if different from applicant: _____

Section B: Utility Information

Utility Service Provider (as applicable): _____

Electric: _____ Acct. # _____

Natural Gas: _____ Acct. # _____

Propane: _____ Acct. # _____

Oil: _____ Acct. # _____

Wood: _____ Acct. # _____

Coal: _____ Acct. # _____

Primary Heat Source: _____ **Secondary Heat Source:** _____

(Electric, Natural Gas, Propane, Oil, Wood, Coal)

I certify that the above information is accurate to the best of my knowledge. I give the above listed utility service providers permission to release my account information, including both consumption and expenditure data, to this agency or the Washington State Department of Commerce for current and future data analysis.

Applicant Signature: _____ **Date:** _____

Declaration of No Income

I, _____, do hereby declare that I have not received any income for the month(s) of:

1. _____ 2. _____ 3. _____

The reason that I have had no income for the months listed above is as follows:

_____

_____

_____

I have been meeting my basic living needs for food, shelter and utilities in the following way:

Food: _____

Shelter: _____

Utilities: _____

I certify that the information contained above is complete and accurate to the best of my knowledge. I understand that I am signing this statement under penalty of prosecution if I knowingly give false information, which results in assistance received for which I am not eligible.

_____ _____

Client Signature/Date Agency Representative/Date

Date to Participant:

_____

Sample Dispute Resolution Flow Chart

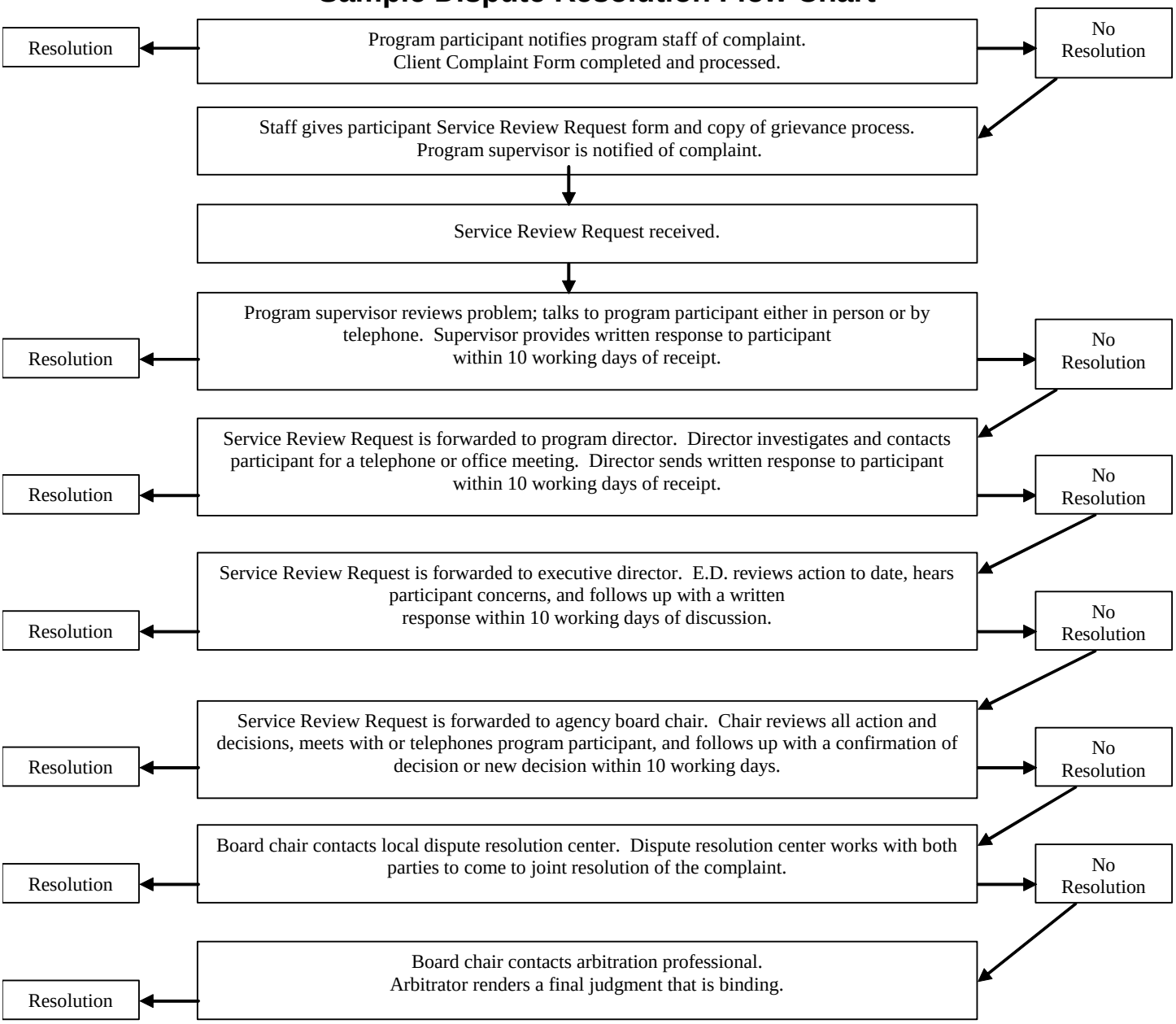

**** NOTE: Subject to need, Building Performance Center (BPC), as the State's designated Peer Circuit Rider, will assign a local agency representative with appropriate technical expertise to assist contractors with outside review.**

The sample dispute resolution flow chart above addresses grievances in this order:

1. Program Staff	4. Agency Executive Director	7. Professional Arbitrator
2. Program Manager/Director	5. Chair, Board of Directors	
3. Division Director	6. Dispute Resolution Center	

Client Complaint Form

Client Information

Date	Program	Social Security #	Telephone #
First Name	Middle	Last Name	
Service Address	Apt.	City	Zip Code

Nature of Complaint:

- ☐ Denial of service
- ☐ Ineligible
- ☐ Deferral policy
- ☐ Application not handled in a timely manner
- ☐ Dissatisfaction with work

Details of Complaint:

_____

_____

Action Taken:

- ☐ Client directed to appropriate program staff
- ☐ Client received copy of agency dispute resolution process and Service Review Request
- ☐ Client sent copy of agency dispute resolution process and Service Review Request
- ☐ Other

Details of Action Taken:

_____

_____

Program staff contacted: ☐ **Yes** **Date contacted:** _____

Name of program staff contacted:_____

☐ Copy of Client Complaint Form in client's file ☐ Complaint noted in program database

Complaint Received By:

Date to Client:
_____

Service Review Request

Fill out this form with the information requested. *A written account is required for review to proceed.*

Name: _____

Address: _____

City/State/ZIP: _____

Home or Message Phone: _____ Work Phone:_____

Describe the circumstances for which you are requesting a service review. What happened? When did it happen? Where did it happen? Who is involved or who may have knowledge of the situation? Attach a separate page if needed.

_____

_____

When are you available to meet to discuss this matter?

Date 1: Morning/Afternoon *(circle one or both)*

Date 2: Morning/Afternoon *(circle one or both)*

I certify that the above statements are true and accurate to the best of my knowledge.

Your Signature:_____Date: _____

Give this completed form to any agency staff member or mail in envelope provided. It will be promptly forwarded to the supervisor/director of the program/division involved. You will be contacted within 10 working days of the date received to confirm a meeting time.

Office Use: _____ _____
Received by Date Received

Office Use:

Received by: _____ Title:_____ Date: _____

Reviewed by: _____ Title:_____ Date: _____

Participant contacted, meeting scheduled: ☐ Date: _____

☐ In-office meeting ☐ Telephone meeting ☐ In-home meeting

Notes from meeting: _____

_____

_____

_____

_____

_____

Name/Position: _____ Date:_____

Resolution: _____

_____

_____

_____

_____

_____

Name/Position: _____ Date: _____

To:

_____

Address:

_____

Phone Number:

_____

Project Number:

_____

As a result of reviewing your concerns with you and the details of your file, the following conclusion has been reached:

_____

_____

We will keep a copy of this information in our files for the next 18 months. If you are not satisfied with the above conclusion and would like further review of your complaint, please indicate in the space provided at the bottom of this letter and return. Thank you for participating in this process.

Signed: _____ _____ _____

Name Title Date

Name: _____ Telephone Number:_____

Address: _____ Best time to call:_____

☐ I request further review of this situation. My reasons and comments are in the space below. (*Attach a separate sheet if needed.)*

_____

_____

Your Signature: _____ Date:_____

Dispute Resolution Fact Sheet

Arbitration is the submission of a dispute to one or more impartial persons for a final and binding decision. Through contractual provisions, the parties may control the range of issues to be resolved, the scope of relief to be awarded, and many procedural aspects of the process.

Chapter 7.04 RCW ARBITRATION

Under Chapter 7.04 RCW **(http://apps.leg.wa.gov/rcw/)**, all arbitrations are final and binding unless there is arbitrator misconduct or the arbitrator obviously disregarded the law.

Mediation is a process whereby a neutral person – the mediator – assists the parties in reaching a mutually acceptable resolution to their dispute. The mediator does not have the authority to make a binding decision, unlike arbitration, where the arbitrator renders a decision that is final and binding.

Appropriate Uses Of Mediation

Any civil dispute between two or more individuals or groups is appropriate for mediation. All parties to the dispute must be able to comprehend and be willing to use the third party role of mediation. Thus individuals with impaired mental or emotional functioning often are unable to enter into productive negotiating. Also, individuals who have been part of a violent pattern of victimization usually are not able to negotiate in their best interests if they are the victims or stop intimidating behaviors if they are the persecutors. Such situations usually are not amenable to mediation.

What are Some Advantages of Mediation?

- Parties are directly engaged in negotiating the settlement.
- The mediator, as a neutral third party, can view the dispute objectively and can assist the parties in exploring alternatives that they might not have considered on their own.
- As mediation can be scheduled at an early stage in the dispute, a settlement can be reached much more quickly than with litigation.
- Parties generally save money through reduced legal costs and less staff time.
- Mediators have been carefully chosen for their knowledge and experience.
- Parties enhance the likelihood of continuing their business relationship.
- Creative solutions or accommodations to special needs of the parties can become a part of the settlement.
- Information disclosed during mediation may not be divulged as evidence in any arbitral, judicial, or other proceeding.

How Does Mediation Differ From Arbitration?

Arbitration is less formal than litigation, and mediation is even less formal than arbitration. Unlike an arbitrator, a mediator does not have the power to render a binding decision. A mediator does not hold evidentiary hearings as would an arbitrator but instead conducts informal joint and separate meetings with the parties to understand the issues, facts, and positions of the parties. In contrast, arbitrators hear testimony and receive evidence in a joint hearing, on which they render a final and binding decision known as an award. In joint sessions with each side, a mediator tries to obtain a candid discussion of the issues and priorities of each party. Gaining certain knowledge or facts from these meetings, a mediator can selectively use the information derived from each side to:

- Reduce hostility between parties and help them engage in meaningful dialogue on the issues at hand.
- Open discussions into areas not previously considered or inadequately developed.
- Communicate positions or proposals in understandable or more palatable terms.
- Probe and uncover additional facts and the real interests of parties.
- Help each party to better understand the other parties' views and evaluations of a particular issue without violating confidences.
- Narrow the issues and each party's positions, and deflate extreme demands.
- Gauge the receptiveness for a proposal or suggestion.
- Explore alternatives and search for solutions.
- Identify what is important and what is expendable.
- Prevent regression or raising of surprise issues.
- Structure a settlement to resolve current problems and future parties' needs.

Dispute Resolution Resources

Arbitration

American Arbitration Association (AAA)
http://www.adr.org/

Regional Office
1 Convention Place
701 Pike Street, Suite 950
Seattle, WA 98101-4111
(206) 622-6435
Fax: (206) 343-5679

Mediation

Resolution Washington: An Association of Dispute Resolution Centers
http://www.resolutionwa.org/

Dispute Resolution Center Listings

If a dispute resolution center (DRC) is not available in your immediate area, contact the nearest center to discuss your agency's options.

Bellevue Neighborhood Mediation Program
11511 Main Street, P.O. Box 90012
Bellevue, WA 98009-9012
(425) 452-4091
Web site: **http://www.cityofbellevue.org/**

Benton Franklin Dispute Resolution Center
5219 W. Clearwater, Suite 11
Kennewick, WA 99336
(509) 783-3325
Fax: (509) 783-3449
E-Mail: **bfdrc@bfdrc.org**
Web site: **http://www.bfdrc.org/**

Community Mediation Services
610 Esther St., P.O. Box 1995
Vancouver, WA 98668-1995
(360) 619-1140
Fax: (360) 696-8009
E-Mail: **Community.Mediation@ci.vancouver.wa.us**
Web site: **http://www.ci.vancouver.wa.us/**

Dispute Resolution Center of Kitsap County
9004 Washington Ave. NW
Silverdale, WA 98383
(800) 377-6583 or (360) 698-0968
Web site: **http://www.kitsapdrc.org/**

Dispute Resolution Center of Lewis County
57 W. Main St., #185
Chehalis, WA 98532
(360) 748-0492
Fax: (360) 748-7717
E-Mail: **drclc@quik.com**

DRC of Island and Snohomish Counties
Mailing: PO Box 839
Street: 2801 Lombard Avenue
Everett, WA 90206
(800) 280-4770 or (425) 339-1335
Fax: (425) 259-2110
E-Mail: **drc@voaww.org**
Web site: **http://www.voaww.org/**

Dispute Resolution Center of Thurston County
PO Box 6184
Olympia, WA 98507
(360) 956-1155
Fax: (360) 357-5168
E-Mail: **info@mediatethurston.org**
Web site: **http://mediatethurston.org/**

Dispute Resolution Center of Yakima and Kittitas Counties
1106 B. West Lincoln Ave.
Yakima, WA 98902
(509) 453-8949 or 1 (800) 853-8949
Fax: (509) 453-0910
E-Mail: **drcyakima@nwinfo.net**
Web site: **http://www.drcyakima.org/**
Newsletter: www.resolutionwa.org

Fulcrum Institute Dispute Resolution Center
905 W. Riverside, Suite 304
Spokane, WA 99201
(509) 838-2799
Fax: Same as telephone

King County Dispute Resolution Center
P.O. Box 21148
Seattle, WA 98111
(888) 803-4696 or (206) 443-9603
Fax: (206) 443-9737
Web site: **http://www.kcdrc.org/**

Mediation and Settlement Center
138 1st Street South, Suite 6
Montesano, WA 98563
(360) 249-1925
Fax: (360) 249-1926
E-mail: **coastaldrc@centurytel.net**

Neutral Ground - Walla Walla
P.O. Box 1222
Walla Walla, WA 99362
(509) 522-0399

NW Conflict Management Center
Community Building
35 W. Main, Suite No. 230
Spokane, WA 99202
(509) 456-0103
Fax: (509) 462-0525

Okanogan County Dispute Resolution Center
17 S. Ash St. - PO Box 3567
Omak, WA 98841
(509) 826-1776
E-Mail: **drc@ncidata.com**

Peninsula Dispute Resolution Center
PO Box 1035
Port Angeles, WA 98362
(360) 452-8024
E-Mail: **PDRC@olypen.com**
Web site: **http://www.pdrc.org/**

Pierce County Dispute Resolution Center
917 Pacific Avenue, Suite 206
Tacoma, WA 98402
(253) 572-3657
Fax: (253) 572-3579
E-Mail: **clientservices@pccdr.org**
Web site: **http://www.pccdr.org/**

Skagit County Mediation Services
601 South Second St.
Mount Vernon, WA 98273
(360) 336-9494
Web site: **http://www.skagitcounty.net/**

Whatcom Dispute Resolution Center
13 Prospect St.
Bellingham, WA 98225
(360) 676-0122
Web site: **www.co.whatcom.wa.us/superior/resources/dispute.jsp**

Training Opportunities

Many DRCs offer mediation training throughout the year. Contact individual DRCs for training schedules.

Priority List of Weatherization Measures

Major Measure	Existing Condition	Action		
		Site-Built (up to 4 units)	**Mobile**	**Multi-Family** (5 units or more)
Ducts	Conditioned space	No measure	No measure	No measure
	Unconditioned space R-0 (or effective R-0)	Add up to R-19	Add up to R-19	No measure
Ceiling	R-0 to R-11	Add up to R-38	Add up to R-38 or maximum allowed by cavity	Add up to R-38
	R-12 to R-19	Add up to R-38	No measure	No measure
	Over R-19	No measure	No measure	No measure
Exterior Wall	Closed cavity - Empty	Dense pack cavity	Dense pack cavity	Dense pack Cavity
	Open kneewall	R-11 batt or fill cavity	NA	No measure
Underfloor/ Foundation	Conditioned R-0 (see also Specification 8.6 Sealed Crawlspace)	R-11 foundation	R-11 foundation	No measure
	Vented R-0 to R-11	Install maximum insulation based on floor joist cavity depth up to R-30	Install maximum insulation based on floor joist cavity depth up to R-30	No measure
	Greater than R-11	No measure	No measure	No measure

General Heat Waste Reduction List

Total General Heat Waste Reduction Material and Labor Cost must not exceed $250 (≤$250) per unit.

Low Cost/No Cost Measure	Existing Condition and/or Location	Action
Air Sealing	Large obvious holes	Priority Air Seal
	Additional energy conservation	Blower-door assisted air seal
Hot Water Temperature	Above or below 120 degrees Fahrenheit	With client approval, adjust water temperature to 120 degrees Fahrenheit
Water Heater Insulation	No water heater insulation jacket is present AND water heater insulation can be added without voiding warranty	Install a minimum R-10 insulated tank wrap in unconditioned spaces
Water Pipes To and From Water Heater	No insulation or less than R-3 insulation on first six feet of water pipes entering and exiting water heater.	Wrap at least the first six feet of the water pipes with a minimum of R-3 insulation, even in conditioned spaces, if access and space makes installation possible
Showerhead	Showerhead that uses more than 2.5 gallons per minute	With client approval, replace with showerhead that uses 2.5 gallons per minute or less
Faucet Aerators	No water-saving faucet aerators	Optional measure to install water-saving faucet aerators
Lighting	Incandescent light bulbs or halogen or incandescent torchiere lamps	With client approval, replace with Energy Star rated compact fluorescent light bulbs or CFL torchiere lamps
Carbon Monoxide Detector	Homes with a combustion appliance such as gas, propane, or oil furnace, water heater, cook stove, or wood stove or with an attached garage.	Install approved carbon monoxide detector

WxM Ancillary Items, WRR and H&S

WEATHERIZATION MEASURES (WxM)	Ancillary Items Cost must be included in SIR for associated individual WxM	Weatherization Related Repairs (WRR) Cost must be included in SIR for whole unit package of WxM	Health and Safety Measure (H&S) Separate cost justification Not included in SIR
	Include in Measure List Costs	**Do not include in Measure List Costs**	**Do not include in Measure List Costs**
Insulation			
Attic/Ceiling Insulation	Ventilation baffles, hatch dam, dams for heat producing devices, sealing non-IC rated fixtures, damming soffits and dropped ceilings, chimney clearances, vent clearances, single wall connector and pipes clearances, mechanical equipment retaining wall	Minor roof repair to preserve insulation, building an attic access, bird block wire, vent screening and framing	K&T inspection, K&T wiring, Open J-Box (General Electrical Repair), Garbage removal, passive ventilation, Minor repair of leaking roof that may create moisture/mold issue in new attic insulation. **Secondary:** sealing non-IC rated fixtures, attic hatch/ rigid lid, damming soffits and dropped ceilings, chimney clearances, vent clearances, single wall connector and pipes clearances, mechanical equipment retaining wall, ventilation baffles
Mobile roof foam board insulation (EPDM)	Membrane, boots, vents		
Wall Insulation	Drilling and sealing holes, sealing high and low openings in balloon framing, single wall connector and pipes clearances	Building structure to seal unusual openings (as in void areas between double ceilings). Minor roof repair to preserve insulation	Minor repair of leaking roof that may create moisture/mold issue in new wall insulation.
Knee wall Insulation	String, staples	Building a knee wall access	
Duct Insulation	Support, isolation from ground, duct repair, duct replacement		
Floor Insulation	Ground cover (if installing underfloor insulation), string, lath, staples, belly patches, belly material, insulation coverage, passive venting, mobile home duct insulation	Skirt repair or replace, plumbing repair, Building a crawl space access, exterior access, vent screening and framing	Open J-Box(General Electrical Repair), Garbage or sewage removal, passive ventilation, ground cover (if install for mold/moisture), gutters, downspouts, and runners, below grade vents and penetrations in foundation walls
Air Seal			
Duct Sealing (unheated area)	In-progress testing (pressure pan test or duct blaster), repair, trunk damming, mastic, fasteners, support	Duct replacement	
Priority Air Seal (obvious holes, crawl, garage, attic)	Fasteners for patches, sealing an attic hatch/rigid lid, crawl space or knee wall access door (i.e. weather stripping).	Unusually large (defined by Grantee), such as more than 1 sheet of sheetrock, patching materials and labor	
Air Seal (required part of the larger air sealing WxM): Attic Hatch/ Rigid with Weather stripping	Items to complete proper construction such as: hold down clasps, handles, caulk for ceiling-to hatch frame seal, insulation	Demolition and/or framing for a new hatch, new ceiling trim and stop	
Air Seal (required part of the larger air sealing WxM): Crawl space or knee wall access door	Hinges, latches, insulation, 3 tab roofing for dog house style crawl access covers,Treated Lumber, Nails	Demolition of deteriorated existing frame, new framing, new trim and stop	
Air Seal (required part of the larger air sealing WxM): Caulking, weather stripping existing windows			
Mechanical Ventilation (IAQ)	damper, ducting, roof jack, wiring, insulation for existing ducts,		**Secondary:** mechanical ventilation
Heating System Replacement			
Ductless Heat Pump	wiring	Repair/replace Heat/Cool System due to damage, Inspect, clean & tune,	Repair/replace Heat/Cool System due to H&S, Inspect, clean & tune
Natural Gas Furnace 90%+	venting	Repair/replace Heat/Cool System due to damage, Inspect, clean & tune,	Repair/replace Heat/Cool System due to H&S, Inspect, clean & tune
Other Measures			
Hot/Cold Water Pipe Insulation (attic, crawl)	Panduit straps, tape	**Secondary:** hot and cold water pipe insulation	

Secondary: The Work Classification DTF tried to identify for each measure if it was "Conservation," "WRR," or "H&S." This task was not easy. One of the benefits of this program is the flexibility. For measures that can be determined as any of the three: Conservation (including Ancillary Items), WRR, or H&S, the "Secondary" classification means the same measure is listed in another classification as Primary. The Primary classification is the one with preference. If the Secondary classification is used, ensure that the justification is documented in the client file.

Solid Fuel Burning Appliance Systems Supplemental Audit Form

Complete this form and place in client file.

1. Is the system the primary heat source? Yes____ No_____

2. What are the existing conditions of the system?

Components	Good	Fair	Poor	Health & Safety Concerns	Inoperable	Inefficient & life span less than one year
Chimney/ flue system						
Wood heating unit						
Surrounding area (hearth, clearances, location)						

3. Describe recommended measure for existing situation: _____

_____

_____

4. What is your recommendation, based on cost and nature of the problem?

☐ Repair ☐ Replace

5. Who is making this recommendation?

☐ Agency Representative ☐ Heating System Subcontractor

I certify that the above information is complete and accurate.

_____

Signature of Agency Representative *Date*

Client Information: I have received information on safe operation, proper maintenance, and clean burning for my new (or repaired) solid fuel burning appliance system.

_____

Client Signature *Date*

To download active spreadsheet, see **Exhibit 5.1.6A, *Economic Analysis of Refrigerator Replacement***

Economic Analysis of Refrigerator Replacement

Blue Entries are cells that can be changed by the user
Remember to press Enter after typing each input
Check for updates at: http://www.energytools.com

Main Inputs

Name of Job:	Tim Wilkins, 3362 Freezing Lane, Anchorage, AK	
Monthly Energy Cost of Existing Refrigerator, as read by Power Meter:	$ 10.23	per month
Annual Energy Use of Replacement Refrigerator from Energy Label:	430	kWh per year
Cost of Refrigerator Replacement, including disposal of old fridge:	$ 500	
Electric Rate for the Home with the Refrigerator: (make sure this is entered into the Power Meter)	$ 0.095	per kWh

Economic Assumptions Supplied by DOE

Life of the Refrigerator:	15	years
Economic Discount Rate (real, with inflation removed):	3.50%	per year

Results

Annual Energy Use of Existing Refrigerator:	1,292	kWh per year
Annual Energy Use of Replacement Refrigerator:	430	kWh per year
Energy Savings:	862	kWh per year
Annual Energy Cost Savings:	**$ 82**	**per year**
Simple Payback:	**6.1**	**years**
Savings-to-Investment Ratio, SIR:	**1.89**	

CERTIFICATE OF INSULATION

DWELLING INFORMATION	CONTRACTOR INFORMATION
ADDRESS OF RESIDENCE: DATE INSULATION WAS INSTALLED:	NAME: ADDRESS:

Area Insulated / Area Identifier (Insert "area-specific" info in space provided)	Square Footage	Existing R Value	Added R Value	Final R Value	Type of Insulation & Method of Installation (Standard or Dense Pack)	Depth	# of Bags
Attic – Area 1							
Attic – Area 2							
Attic – Area 3							
Floor – Area 1							
Floor – Area 2							
Floor – Area 3							
Wall – Area 1							
Wall – Area 2							
Wall – Area 3							
Other							

I, _____ (print name), certify that this residence was insulated in conformance with all applicable codes, standards, regulations, and specifications of the Low-Income Weatherization Assistance Program, as administered by the State of Washington.

_____ AUTHORIZED SIGNATURE

_____ DATE

REVISED 4/03

Department of Commerce
Innovation is in our nature.

Combustion Safety Test Report

Client		Date				
Address		Auditor & Inspector name *initials do not suffice*				

Pre-test: *START CO measurement (Monoxer) outside*

Combustion Appliance Zone (CAZ)			PRE	POST	PRE	POST
1	**CAZ Pressure** with reference to (WRT) outside "BASELINE					
2	Outside wind speed					
3	Outside temperature					
4	Designate appliance(s): Appliance nam	1:			2:	
	Appliance location	1:			2:	
	Type of combustion **open/closed**	1:			2:	
	Type of draft **natural/induced/forced**	1:			2:	
	Shared venting **yes/no**	1:			2:	
	Vent Category **Type I, II, III, IV**	1:			2:	
5	Hazardous or unsafe conditions observed?		Y/N	Y/N	Y/N	Y/N
6	Visible signs of vent pipe leaks or damage observed?		Y/N	Y/N	Y/N	Y/N
7	Smell of gas or indication of fuel leak(s) observed?		Y/N	Y/N	Y/N	Y/N
*Furnace **on** or **off**? Could be worst case either way, depending on duct leakage.*			on/off	on/off	on/off	on/off

Set up CAZ in Worst Case Depressurization (see Exhibit 5.3.1B Tech Support Doc)			PRE	POST	PRE	POST
8	**CAZ pressure** WRT outside. Door **open/closed** (circle one)	Line 8				
8a	Result of Line #8 minus Line #1"baseline" = Worst Case Dep.	- Line 1 _____ = (8a)				
8b	Record CAZ Depressurization Limit: See Reference Tables					

Start up combustion appliance		PRE	POST	PRE	POST
9	Flame roll-out observed	Y/N	Y/N	Y/N	Y/N
10	Did the equipment spill gasses for more then 1 minute? If yes, **STOP** test. Let cool. Continue test in **natural** conditions.	Y/N	Y/N	Y/N	Y/N
11	Did the flame change when the air handler turned on?	Y/N/NA	Y/N/NA	Y/N/NA	Y/N/NA

After 5 minutes of combustion (steady state)		PRE	POST	PRE	POST
12	**Measure ambient CO** in the living space.				
13	**Measure draft pressure** in combustion appliance vent WRT CAZ				
13a	Record Minimum Acceptable Draft Pressures: See Reference Tables				
14	**Measure CO** in the exhaust gases of the vented appliance				
15	**Measure draft pressure** in the combustion appliance vent WRT CAZ (From line #8, if door is closed-open it. If door is open-close it) Door is **open / close** (circle one)				
16	**Measure heat rise temperature** across heat exchanger				
16a	Record manufacturer's acceptable heat rise range from label				

Fireplace/Wood Stove Zone (FPWSZ)		PRE	POST	PRE	POST
17	**Measure FPWSZ pressure** WRT outside				
	Vent pipe, chimney, or clearance problems observed (note below)	Y/N	Y/N	Y/N	Y/N

Oven		PRE	POST	PRE	POST
18	**Measure CO in the exhaust gases of the oven**				
	Ambient 1				
	Ambient 2				

Return house to pretest conditions		PRE	POST	PRE	POST
19	Check box when done. Add any comments or notes below.	☐	☐	☐	☐

Notes:

COMBUSTION SAFETY TEST REPORT REFERENCE TABLES

Vent Categorization Per NFPA 54 (Line 4)	
Category I NFGC	***Category III Airtight***
Non-Condensing Negative Pressure (-) High Temperature Flue Gases Natural or Fan Assisted Drafts AFUE usually 65-83% Typical Materials: Single wall metal, B-Vent, Lined Masonry	Non-Condensing Positive Pressure (+) High Temperature Flue Gases Fan Assisted Draft AFUE usually 78-87% Typical Materials: Sealed metal or plastics per manufacturer
Category II Corrosion Resistent	***Category IV Airtight & Corrosion Resistent***
Condensing Negative Pressure (-) Low Temperature Flue Gases *<<very little equipment in this category>>* Typical Materials: Special as designated by manufacturer	Condensing Positive Pressure (+) Low Temperature Flue Gases Sealed Combustion AFUE usually 90% + Typical Materials: Sealed plastics per manufacturer specification

Table 4: CAZ Depressurization Limits (Line 8b)

Venting Condition	Limit (Pa)
Stand alone natural draft water heater (including outside chimneys)	-5
Orphaned natural draft water heater	-2
Natural draft boiler or furnace vented in combination w/ water heater	-3
Natural draft boiler or furnace w/ vent damper commonly vented w/ water heater	-5
Induced draft boiler or furnace commonly vented w/ water heater	-5
Individual natural draft boiler or furnace	-5
Fireplace	-4
Wood stoves & fire place inserts, including air tight models w/ outside combustion air	-5
Power vented or induced draft boiler or furnace alone, also Pellet Stoves	-15
Chimney-top draft inducer; High static pressure flame retention head burner; Direct vented appliances; Sealed combustion appliances	-50

Min Acceptable Draft Pressures (Line 13a)

Temp (F)	Draft (Pa)
≤15	-2.4
20	-2.3
25	-2.1
30	-2.0
35	-1.9
40	-1.8
45	-1.6
50	-1.5
55	-1.4
60	-1.3
65	-1.1
70	-1.0
75	-0.9
80	-0.8
85	-0.6
≥ 90	-0.5

Table 3: Combustion Safety Test Action Level Table (Line 14)

CO Test Result for undiluted flue gas at steady state	**And/Or**	**Spillage and Draft Test Results**	**Retrofit Action**
0 - 25 ppm	***And***	**Passes**	Proceed with work
26 - 100 ppm	***And***	**Passes**	Recommend that CO problem be fixed
26 - 100 ppm	***And***	**Fails under Worst case only**	Recommend a service call for the appliance. Correct problems causing combustion appliance to fail under worst case test
>100 - 400 ppm	***Or***	**Fails under natural conditions**	**Stop Work**: Work may not proceed until the system is serviced and the problem is corrected.
> 400 ppm	***And***	**Passes**	**Stop Work**: Work may not proceed until the system is serviced and the problem is corrected.
>400 ppm	***And***	**Fails under any condition**	**Emergency**: Shut off fuel to the appliance. Owner/Agency call for service immediately.

Depressurization Result - ACTION
The Local Agency shall perform a worst-case depressurization test in each combustion appliance zone. When combustion appliance zone (CAZ) depressurization limits are exceeded under worst-case conditions, the depressurization shall be brought within acceptable limits as detailed in Table 4: CAZ Depressurization Limits (above) ***Exception:*** If Local Agency is unable to meet CAZ Depressurization Limits or standards, the reasonable efforts attempted, the actions taken, and the education provided to the client shall be documented in the client file.

Table 3.1: CO Test Action Levels for Ovens at Steady State Operation (Line 18)

CO Test Result for undiluted flue gas	**Retrofit Action**
0 - 99 ppm	Proceed with work.
100 - 300 ppm	Recommend service.
>300 ppm	Unit must be serviced prior to Wx work.

Notes:

Department of Commerce
Innovation is in our nature.

Daily In-Progress Combustion Safety Test Report

Client		Date	
Address		Auditor Name *initials do not suffice*	

Local Agency Auditor: Complete Line 4 and 8b

4	*FA =Forced Air, HWT =Hot Water Tank, WS =Wood Stove, FP =Fireplace, PS =Pellet Stove, R =Range*	***Place abbreviation for appliance in lines below***			
	Fuel Type: (LP, NG, Oil, Wood, Pellet)				
	Designate appliance(s): Appliance (App) Name	App 1:		App 2:	
	Appliance Location	App 1:		App 2:	
	Type of combustion (**open/closed**)	App 1:		App 2:	
	Type of draft (**natural/induced/forced**)	App 1:		App 2:	
	Shared venting (**yes/no**)	App 1:		App 2:	
	Vent Category (**Type I, II, III,IV**)	App 1:		App 2:	
8b	Record CAZ Depressurization Limit (See Reference Tables)				

	Date - Day One	Date - Day Two	Date - Day Three
Contractor/Technician: Complete remainder of form			
	Day One	Day Two	Day Three
Working CO Detector present or installed Day One?	yes / no		
Technician Name/Date *(initials do not suffice)*			

Set up CAZ in Worst Case Depressurization (see Exhibit 5.3.1B Technical Support Document)		Day One		Day Two		Day Three	
		App 1	App 2	App 1	App 2	App 1	App 2
1	**"Baseline" CAZ Pressure** with reference to (WRT) outside						
	Furnace on or off? Either could be Worst Case, depending on duct leakage.	on / off	on / off	on / off	on / off	on / off	on / off
	Indicate whether CAZ door is open or closed (circle one)	open/closed	open/closed	open/closed	open/closed	open/closed	open/closed
8	Record CAZ pressure WRT outside						
8a	Record result of Line #8 minus Line #1 ("baseline")						
	Record CAZ Depressurization Limit from 8b (above)						

If worst case depressurization exceeds depressurization limit, ACTION is required. See back of form.

Start up Appliance		Day One		Day Two		Day Three	
		App 1	App 2	App 1	App 2	App 1	App 2
10	Did the equipment spill gasses for more than 1 minute?	yes / no	yes / no	yes / no	yes / no	yes / no	yes / no

If answer is "yes," ACTION is required. See back of form.

Return house to pretest conditions		Day One	Day Two	Day Three
19	Check box when done. Add any comments or notes	☐	☐	☐

Notes:

COMBUSTION SAFETY TEST REPORT REFERENCE TABLES

Table 4: CAZ Depressurization Limits (Line 8b Combustion Safety Test Report)	
Venting Condition	**Limit (Pa)**
Stand alone natural draft water heater (including outside chimneys)	-5
Orphaned natural draft water heater	-2
Natural draft boiler or furnace vented in combination w/ water heater	-3
Natural draft boiler or furnace w/ vent damper commonly vented w/ water heater	-5
Induced draft boiler or furnace commonly vented w/ water heater	-5
Individual natural draft boiler or furnace	-5
Fireplace	-4
Wood stoves & fire place inserts, including air tight models w/ outside combustion air	-5
Power vented or induced draft boiler or furnace alone, also Pellet Stoves	-15
Chimney-top draft inducer; High static pressure flame retention head burner; Direct vented appliances; Sealed combustion appliances;	-50

Depressurization Result - ACTION

The Local Agency shall perform a worst-case depressurization test in each combustion appliance zone.

When combustion appliance zone (CAZ) depressurization limits are exceeded under worst-case conditions, the depressurization shall be brought within acceptable limits as detailed in Table 4: CAZ Depressurization Limits

Exception: If Local Agency is unable to meet CAZ Depressurization Limits or standards, the reasonable efforts attempted, the actions taken, and the education provided to the client shall be documented in the client file.

In-Progress Daily Test Out - ACTION Items

If worst case depressurization exceeds depressurization limit ACTION is required.

	Document ACTIONS Taken	√ Done	Levels	Initials	Date
1.	Document Daily Test Out levels that exceed limit:				
2.	Call Auditor for direction and document:				
3.	Do one or more of the following				
a.	Confirm CO Detector is in place and operational:				
b.	Take steps to mitigate issue for overnight:				
(1)	Reduce depressurization				
	Disable/Disengage fan that is creating problem:				
	Tape of switch:				
	Other: _____				
(2)	Ventilate				
	Provide makeup air for interim:				
	Open window:				
	Other: _____				
4.	Inform Client of ACTION(s) taken (temporary):		Client signature - received info		
	Educate Client steps must take (or not) to remain safe:				
5.	Re-test and Document after taking mitigation actions:				

State of Washington, Weatherization Assistance Program

Technical Support Document

Combustion Safety

This document is intended to support in detail the Combustion Safety Test Report. The Combustion Safety Test Report is a tool to document the condition of two (2) appliances and their performance. Each combustion appliance in homes that are weatherized or repaired must be reported pre- and post- on a combustion safety test report. The added columns allow two (2) combustion appliances per form. Each row of the pre- and post- columns must be addressed.

The Combustion Safety Test Report must be filled out in detail for each completed project. You must document in the comments section of the Combustion Safety Test Report any special circumstances or health and safety related concerns that might help someone understand the condition of the home (pre- and post-), as well as the concerns expressed by the occupants, or the agency concerns for the occupants safety at the time testing was performed.

The testing procedure outlined in this document is intended to be the minimum tests needed to understand the condition and performance of an appliance. It is recommended that more in-depth testing be performed where multiple appliances share a chimney, or where other indications of potential problems exist.

Pre-test:

Start CO measurement (Monoxer) outside.

Line #1 Measure existing Combustion Appliance Zone (CAZ) pressure (baseline), CAZ With Respect To (WRT)) outside.

Measure the existing CAZ pressure (baseline), house with reference to outside. You will need this measurement when measuring combustion appliance zone worse case and other procedures that are normally low-pressure measurements (-15pa to 15pa).

Line #2 Outdoor wind speed

Using a Dwyer wind gauge, measure and record the outside wind speed if there is noticeable wind at the time of testing. If the wind speed is consistently in excess of 15 mph or gusting to the point of not being able to get an accurate test, document this condition and return at a later date to get accurate test results. If winds in excess of 15 mph do exist, this condition does not preclude performing Section I and Section II of the diagnostic test report. Under these conditions you will have to come back (when there is wind less than 15 mph) to confirm lines #8, 13, 15 and 17. You may find hazardous conditions before you get to line #8, or other problems not related to pressure and draft.

Line #3 Outdoor temperature

Record the outside ambient temperature. You will need this number to determine if there is adequate minimum draft (line #13 &15).

Line #4 Combustion Appliance Zone(CAZ)*, designate appliance

Record what kind of appliance (furnace, hot water heater, parlor stove, fireplace, woodstove, etc.) is in the CAZ. Write it in on the line provided. Also determine what type of appliance it is in terms of direct vent, sealed combustion, induced draft, etc. This will help determine how and where an appliance should be tested later in this procedure.

***Definition:** Combustion appliance zone (CAZ) is the physical area in which the combustion appliance is located or contained by door or access closure. Examples: A closet with a closing door, an attic with a closing access panel between the living space and attic, a living room that contains a fireplace or wood stove and has doors that isolate this area from bedrooms and other rooms. A combustion appliance zone is any area (zone) which can be physically closed off to another part of the home, and that contains a combustion appliance. If the only combustion source is a fireplace or wood stove go to line #17.

Line #5 Is there a hazardous or unsafe condition?

Is there anything in the CAZ that could be considered a health and safety problem? Indoor Air Quality (IAQ), electrical discrepancies, fire hazards, combustibles, or potential testing problems that should be documented. If yes, you must comment with name and date.

Line #6 Are there visible signs of vent pipe leaks or damage?

Are there any problems with the combustion appliance vent pipe, connecting chimney, chimney liner, or vent termination that need repairs or further inspection?

Line #7 Is there the smell of gas or indication of fuel leak

Do you or the client smell any gas? Did you check with a combustible gas detector or with detection fluid? If there is a leak, indicate by marking yes, and contact the local natural gas company or a contractor and document the location of the leak below in the comments section .

Worst-case* set-up test for Combustion Appliance Zone.

*Definition: Worst-case is any condition that puts the appliance being tested in the most hazardous condition through means of house configuration. These configurations such as opening and shutting bedroom, laundry, garage, closet, basement, doors, etc., may occur during normal use of the home. This may be different for different lifestyles and occupants, but the CAZ should be tested in a manner that would address many clients and lifestyles. All reasonable house configurations should be considered.

Worst-Case Set-Up procedure

Prepare house:

1. Close all interior and exterior doors and windows. Is furnace air handler on or off? Could be worst case either way, depending on duct leakage. Turn on all exhaust fans - bathroom, kitchen, clothes dryers (clean out lint filter).*

2. Start at the room furthest from the combustion appliance and perform a smoke test at each interior door to determine whether to leave it open or closed.

   a. Position yourself in or towards the main body of the house.

   b. Open the door slightly (3/4”). If the smoke goes in, leave the door all the way open. If the smoke comes back toward the main body or towards you, close the door.

3. Smoke test the door to the CAZ. If the smoke comes toward the main body or towards you, open the door. If the smoke goes into the CAZ, close the door.

*** EXCEPTION TO STEP (1.)** If the furnace does not have a manual fan switch you may have to turn on all your fans first (smoke the doors) then turn on the furnace. In this case you must do line #13 a second time, going back and smoking the interior doors again to ensure you had the correct setup. If this is the case, and you go back and find that you had a door in the incorrect position (opened or closed), adjust, retest, document the results, and go back through lines #8 through #13.

Always check rooms that contain mechanical exhaust equipment with chemical smoke as a confirming test. Many times the combination of leaky buildings and supply ducts in a room negate a fans negative effect on the CAZ or main body.

Line #8 Measure the CAZ WRT outdoors. Is the CAZ door Open or closed?

Follow worst-case set -up procedure (above) to determine whether to leave open or shut the CAZ room door(s). Please circle whether you left the CAZ door OPEN or CLOSED. Then record what the pressure is in the CAZ WRT outside using line #1, CAZ baseline pressure to have a better understanding of the contribution the mechanical systems are having on the home versus natural pressures (i.e. stack wind etc.).

****Action Level**

Table 4: *CAZ Depressurization Limits*

Line #9 Was there flame roll-out of combustion equipment?

When the (furnace or hot water heater) combustion appliance starts up, does the flame come out of the appliance? When possible, this test should be done with a cold startup. Many times if the chimney or vent pipe is already heated, the appliance will draft, but it may not be

able to start a draft in a cold chimney. Also, check cover panels and the area around the burner for burned or charred spots. If you see flame roll out or signs that it may be happening intermittently then circle **YES** and comment in file.

Line #10 Did the equipment spill gases for more than one minute?

Does the atmospheric draft or induced draft (hot water heater, parlor stove, furnace etc.) appliance spill combustion gases for more than a minute? If **YES**, STOP test. Let cool. Continue test in natural conditions. Check all around the draft hood with chemical smoke, as some appliances will spill combustion gases and draft at the same time.

Table 2: Maximum Acceptable Appliance Spillage Periods

Appliance Type	Spillage Test Period (minutes)
Water Heater, Gravity Furnace, Boiler	1.0
Space Heater	1.0
Forced Air Furnace	1.0

**** Note:** Generally you will find that if an appliance spills combustion gases for more than one (1) minute, this is an indicator that there will be a draft, chimney configuration, or pressure problems detected at some point between lines 13 and 16.

Line #11 Did the flame change in the furnace when the air handler turned on?

Did the flame change when the fan in the furnace turned on? This can indicate a crack in the heat exchanger. If yes, comment in the file and have it checked by HVAC technician.

**** Note:** If you are working on a furnace without a manual fan switch, you may have to shut down the furnace and start it again to observe this condition because you will have a lot going on when the air handler comes on the first time. Checking for flame change may not detect an existing cracked heat exchanger. Other possible indications of a cracked heat exchanger may be soot in the home, the smell of un-burnt gas or oil, elevated CO levels in the appliance exhaust, and elevated CO levels in the living space when the furnace is running. If you encounter any of these conditions, there are other tests for cracked heat exchangers that you may want to identify and have performed by a qualified professional (check with your HVAC contractor or technician). Caution and a full understanding of the operating performance of all the combustion appliances in the home must be considered when attributing soot, un-burnt gas smells, and elevated CO levels to a cracked heat exchanger.

Line #12 After 5 minutes measure the CO in the ambient air in the living space

Zero the monoxer outside before proceeding. After the combustion appliance has been running for 5 minutes, test the ambient air of the living room or upstairs hallway (if it is a two story) for CO with your monoxer. Record any CO in the living space above zero (0) in parts per million (PPM).

****Action level:** If the ambient CO in the home is above 9 PPM (maximum allowable 9 PPM) and attributable to any combustion appliance in the home, then action must be taken to mitigate the source of the CO before weatherization or repair work starts, or the ambient CO level must be monitored and the problem(s) resolved as part of the work specified. **No home shall be left with ambient CO greater than 9 PPM (attributable to existing combustion appliances) after 5 minutes of run time for an appliance.**

Line #13 Measure the draft pressure in the vent of the combustion appliance Test the combustion appliance vent WRT CAZ

With your digital manometer, measure the draft pressure in the combustion appliance vent (preferably 18" up the vent pipe from the appliance) with reference to the room and record the number in pascals. Be sure to indicate whether negative or positive. Always check your draft pressure measurements with chemical smoke as a confirming test.

If the appliance does not have adequate draft under worst-case conditions, you can start evaluating the problem by turning off all fans and see if the appliance drafts under any or best case condition.

Refer back to line# 2 and check the wind speed, if the wind speed is consistently in excess of 15 mph or gusting to the point of not being able to get an accurate test, document this condition and return at a later date to get accurate test results. If there is marginal draft or a condition that may cause back drafting or spillage, inform the occupants of this situation and make the appropriate recommendations for use of the appliance until additional testing or repairs can be made. Document the condition in the comments section.

Line #13a Minimum Acceptable Draft Pressure: Calculate the minimum acceptable draft pressure using the ranges in Table 1 and record limit in the box.

Table 1: Minimum Acceptable Draft Test Action Levels

Outside Temperature (degree F)	Draft Pressure Standard (Pa)
<10	-2.5
10-90	(Outside temp / 40) – 2.75*
>90	-0.5

*Calculation is as follows: Divide the outside temp by 40, then subtract 2.75 from this value. The result is the minimum acceptable draft.

Line #14 Measure the CO in the exhaust gases of the vented appliance

With your monoxer, take a measurement in the undiluted flue gases of the combustion appliance. Where practical, this test should be measured in the flue ports of the appliance. If you cannot measure at the appliance, measure at its termination point realizing this is a diluted sample but better than not testing at all.

Table 3: *Combustion Safety Test Action Level Table*

Line #15 If the door of CAZ is closed - open it. If the door is open – close it. Open/closed. Combustion Appliance vent WRT CAZ.

If in the beginning of your worst-case set-up test, you left the CAZ door closed, then open it. If left open in the beginning, then close it. Then record the draft pressure combustion appliance vent WRT CAZ as in line #13. This is a verifying test. This test double checks your measurements and helps confirm the results. Always check your draft pressure measurements with chemical smoke as a confirming test.

****Action Level:** *See action level* **Table 4 - *CAZ Depressurization Limits***

Line #16 Heat Rises: Measure temperature across heat exchanger: Heat rise = supply plenum temp - return plenum temp

To get the "heat rise", measure the temperature in the supply air plenum and return air plenum. Subtracting the return plenum temperature from the supply air temperature equals the "heat rise". Take these temperature measurements in the plenums as close to the furnace as possible. Record in degrees Fahrenheit. The manufacturer's acceptable range for heat rise for the unit is often on the nameplate of the furnace.

****Action level:** If the heat rise (the difference between return air temp at the plenum and supply air temp at the plenum) is outside the manufacturer's acceptable range the system fails and there must be a referral made for further analysis by a furnace technician. If the heating unit has not been serviced within the last twelve months, a furnace clean and tune is recommended.

Exception: If manufacturer's acceptable heat rise range is unavailable, the default acceptable heat rise range is greater than 40° and less than 70° Fahrenheit.

Line #17 Fireplace/wood stove zone worst case test: FPWSZ zone WRT outdoors

Record the pressure of the zone that the fireplace or wood stove occupies. See *Worst-Case Set-Up Procedure* between lines #7 and #8, this procedure is the same for fireplace/wood-stove zones. Also document any vent pipe, chimney, or clearance problems with the wood-burning appliance in the comments section.

****Action Level:** *See action level* **Table 4 - *CAZ Depressurization Limits*** *on reverse side of Combustion Safety Test Report (Exhibit 5.3.1A)*

Line #18 Measure the CO in exhaust gases of Ovens:

Interim Gas/Propane Oven Testing Procedure

Ovens produce moisture and oxides of nitrogen. Excess moisture is not good for the durability of the home (possibly contributing to mold problems) and NOX is not healthy. These combustion appliances are capable of producing CO, which is a health hazard. In all cases a carbon monoxide detector is recommended and homeowners should use exhaust ventilation when using these appliances. New appliances may require an extended warm up period to reach steady state.

a. Remove any items/foil in or on oven.
b. Make sure self cleaning features are not activated, set oven to highest setting.
c. Test oven for CO in the flue, before dilution air.
d. After 5 minutes of operation, check for steady state:

If the appliance is located in a confined space and mechanical ventilation is not readily available, mechanical ventilation shall be recommended.

Ventilation provided for unvented gas ovens must provide a minimum capacity of 25 cfm continuous airflow or 100 cfm intermittent.

Oven

Then take a reading in the undiluted flue gases of the oven (after 5 minutes of burn time) and record in PPM. Look in the oven for anything that may melt or catch fire before performing the test. Make sure the oven burner is actually on during the test.

Ambient CO Levels

Carbon monoxide levels in the ambient air around the technician must be monitored throughout all combustion safety tests. Diagnostic evaluations and inspections must be aborted if ambient CO concentrations **greater than 35 ppm** are recorded. CO producing appliances must be disabled and repaired before proceeding with additional diagnostics or inspections.

Ambient CO levels shall be monitored upon entering the combustion appliance zone and during the test period for all appliances. If ambient levels **exceed 35 ppm** at any time, turn off the appliance immediately and make appropriate repair recommendations according to the charts provided.

****Action Level:** *See action level*

Table 3.1 - *Carbon Monoxide Test Action Levels for Ovens*

Line #19 Return house to pre-test condition, circle DONE when complete

Comments: Provide comments in detail when you encounter unsafe conditions. Also document procedures or repairs that were undertaken to resolve or prevent any unsafe conditions. Use both sides of the form or additional paper as needed.

Abbreviations:

CO: Carbon monoxide

CA: Combustion appliance

CAZ: Combustion appliance zone

FPWSZ: Fireplace wood stove zone

HDL: House Depressurization Limit (a standard adopted by Commerce)

HVAC: Heating, ventilation, air conditioning

IAQ: Indoor Air Quality

PPM: Parts per million

Pa: Pascals

WRT: With reference to

Terms:

Air handler – A steel cabinet containing a blower with cooling and/or heating coils connected to ducts, which transport indoor air to and from the air handler.

Backdrafting – Continuous spillage of combustion gases from a combustion appliance.

Bimetal element – A metal spring, lever, or disc made of two dissimilar metals that expand and contract at different rates as the temperature around them changes. This movement operates a switch in the control circuit of a heating or cooling device.

Burner – A device that facilitates the burning of a fossil fuel like gas or oil.

Carbon monoxide – An odorless and poisonous gas produced by incomplete combustion.

Combustion air – Air that chemically combines with a fuel during combustion to produce heat and flue gases, mainly carbon dioxide and water vapor.

Combustion analyzer – A device used to measure steady-state efficiency of combustion heating units.

Depressurize – Cause to have a lower pressure or vacuum with respect to a reference of a higher pressure.

Dilution air – Air that enters through the dilution device --- an opening where the chimney joins to an atmospheric-draft combustion appliance.

Dilution device – A draft diverter or barometric draft control on an atmospheric-draft combustion appliance.

Draft diverter – A device located in gas appliance chimneys that moderates draft and diverts down drafts that could extinguish the pilot or interfere with combustion.

Fan control – A bimetal thermostat that turns the furnace blower on and off as it senses the presence of heat.

Flue – a channel for combustion gases.

Heat anticipator – A very small electric heater in a thermostat that causes the thermostat to turn off before room temperature reaches the thermostat setting, so that the house does not overheat from heat remaining in the furnace and ducts after the burner shuts off.

Heat rise – The number of degrees of temperature increase that air is heated as it is blown over the heat exchanger. Heat rise equals supply temperature minus return temperature.

High limit – A bimetal thermostat that turns the heating element of a furnace off if it senses a dangerously high temperature.

House pressure – The difference in pressure between the indoors and outdoors measured by a manometer.

Inch of water – Small air pressure differences caused by wind, blower doors, furnace fans, and chimneys are measured in inches of water (in.-H_20) in the American measurement system.

Input rating – The rate at which an energy-using device consumes electricity or fossil fuel.

Intermittent ignition device – A device that lights the pilot light on a gas appliance when the control system calls for heat thus saving the energy wasted by a standing pilot.

Make-up air – Air supplied to a space to replace exhausted air.

Manometer –Measuring device for small gas pressures

Mortar – A mixture of sand, water, and cement used to bond bricks, stones, or blocks together.

Net free area – The area of a vent after that area has been adjusted for insect screen, louvers, and weather coverings. The free area is always less than the actual area.

Open-combustion heater – A heating device that takes its combustion air from the surrounding room air.

Orphaned Natural Draft Water Heater - A natural draft water heater vented into an oversized chimney.

Oxygen depletion sensor (ODS) – A safety device for unvented combustion heaters that shuts gas off when oxygen is depleted.

Pascal – A unit of measurement of air pressure. (See Inch of water.)

Plenum – The piece of ductwork that connects the air handler to the main supply duct.

Pressure – A force encouraging movement by virtue of a difference in some condition between two areas.

Return air – Air circulating back to the furnace from the house, to be heated by the furnace and supplied to the rooms.

Room heater – A heater located within a room and used to heat that room.

Sealed-combustion heater – A heater that draws combustion air from outdoors and has a sealed exhaust system.

Space heating – Heating the living spaces of the home with a room heater or central heating system.

Spillage – Temporary flow of combustion gases from a dilution device.

Stack effect – The draft established in a building from air infiltrating low and exfiltrating high.

Stand-Alone Natural Draft Water Heater - A natural draft water heater vented into a properly-sized chimney in accordance with NFPA 31 for oil-fired units, NFPA 54 for gas-fired units, NFPA 58 for propane-fired units and NFPA 211 for solid-fueled units or the venting tables of a chimney liner manufacturer.

Steady-state efficiency – The efficiency of a heating appliance, after an initial start-up period, that measures how much heat crosses the heat exchanger. A combustion analyzer measures the steady-state efficiency.

Supply air – Air that has been heated or cooled and is then moved through the ducts and out the supply registers of a home.

Vent connector – The vent pipe carrying combustion gases from the appliance to the chimney.

Vent damper – An automatic damper powered by heat or electricity that closes the chimney while a heating device is off.

Venting – The removal of combustion gases by a chimney.

Worst-case depressurization test –A safety test, performed by specific procedures, designed to assess the probability of chimney back drafting.

WRT – "With respect to" used to show that the air pressures between two areas are being compared.

Zone – A room or portion of a building separated from other rooms by an air barrier----not usually an effective air barrier.

Weatherization Deferral Form

Project Number Audit Date

Client Name

Address

City & Zip Code

Home or Message phone Work Phone

Deferral of weatherization work on the above home is based on the following conditions:

Recommended measures for remedying the existing conditions are as follows:

I certify that the above information is complete and accurate.

Signature of Agency Representative Date

Client Information: I understand weatherization work has been deferred on my home for the above reasons. I understand the conditions under which weatherization work may continue. I understand I must contact the weatherization agency within 12 months of original application date if conditions have changed and that these changes may allow work to resume. I understand if I contact the weatherization agency more than 12 months after the original application date I need to reapply for weatherization services.

Client Signature Date

MOLD Assessment and Release Form

Client Label

Mold can be a problem in any home where there is an excessive amount of moisture or humidity present. An assessment of your home included a visual check for mold. This is not a mold inspection and the person making this assessment is not a certified mold inspector. Mold testing and identification of specific molds is beyond the scope of this program.

During the weatherization assessment of your dwelling on _____date, our project coordinator visually inspected the following rooms in your home:

Living room	☐ mold not visibly present	☐ mold visibly present
Kitchen	☐ mold not visibly present	☐ mold visibly present
Bathroom(s)	☐ mold not visibly present	☐ mold visibly present
Bedroom(s)	☐ mold not visibly present	☐ mold visibly present
Water heater closet	☐ mold not visibly present	☐ mold visibly present
Attic	☐ mold not visibly present	☐ mold visibly present
Crawlspace/Basement	☐ mold not visibly present	☐ mold visibly present

Other location _____

Estimate in total square feet of existing mold_____

The U.S. Department of Energy generally does not allow Weatherization agencies to mitigate mold problems, however, some actions associated with a cost effective energy saving measure may be taken to reduce moisture problems. Local Agency plans to install the following measures that may help resolve existing moisture problems. The work proposed should not promote new mold growth.

1._____

2._____

3._____

Mold/Moisture disclaimer: By signing below, I acknowledge I have received information concerning moisture and mold conditions in my home prior to Weatherization work being done and I will take steps to reduce excessive moisture.

Name of Applicant: _____

_____ _____

Signature of Applicant Date

Name of Landlord: _____

_____ _____

Signature of Local Agency Staff Date

White copy–agency file, yellow copy–applicant, pink copy-landlord

This is an equal opportunity program. Discrimination is prohibited by Federal Law.

EQUAL HOUSING OPPORTUNITY

Pollution Source Survey

Date: _____
Assesor: _____

High-Risk Household Members

1) Family members less than 4 or more than 60 yrs old Yes ___ No ___
2) Any household members with asthma, respiratory problems or flu like symptoms? Yes ___ No ___
3) Is anyone living in the house pregnant? Yes ___ No ___

Source of Contaminants — Comments:

How old is the house? _____

4) Paint peeling or flaking on floors, walls, ceilins? Yes ___ No ___ _____
5) Has carpet ever been water soaked? Yes ___ No ___ _____
6) Is carpet covering a concrete floor? Yes ___ No ___ _____
7) Any unvented combustion appliances in the home? Yes ___ No ___ _____
8) Do household members smoke inside the home? Yes ___ No ___ _____
9) Do cars park in attached garage? Yes ___ No ___ _____
10) Seasonal water pooling in crawl space? Yes ___ No ___ _____
11) Plumbing leaks in crawlspace? Yes ___ No ___ _____
12) Noticeable leaks or water staining on ceilings or walls Yes ___ No ___ _____
13) Indoor pets? Yes ___ No ___ _____
14) Paints, solvents, thinners, pesticides stored in home? Yes ___ No ___ _____
15) House keeping problems? Cluttter / Unsanitary Yes ___ No ___ _____
16) Has this house been tested for Radon? Yes ___ No ___ _____
17) Are Insecticides or rodenticides used in home or duct Yes ___ No ___ _____
18) Other _____

Strengths of Indoor Contaminants — Comments

19) Unusual odors in the house? Yes ___ No ___ _____
20) Is moisture noticeable on windows? Yes ___ No ___ _____
21) Visible mold anywhere in house? Yes ___ No ___ _____
22) House temp. unusually warm or cold Yes ___ No ___ _____
23) Humidity levels unusually high? Yes ___ No ___ _____

Department of Commerce
Innovation is in our nature.

Diagnostic Test Report

0
Client Name:
0
Address:

Pre Blower Door:				
i.	Client Eligibility Date:			
ii.	Audit Date:			
iii.	Client Interview Performed?		Yes	No
iv.	Pollution Source Survey Completed?		Yes	No
v.	Contaminants present that would either prohibit blower door test completely or require pressurization test:			
vi.	Technician:			
vii.	Date:			

	CALCULATIONS	Pre	In-Progress	Post
1	Calculated total square footage of heated area			
2	Calculated volume of conditioned space			

	BASELINE CONDITIONS & HOUSE TIGHTNESS - Blower door	Pre	In-Progress	Post
3	Primary heat source fuel type (example: nat. gas, electric, propane, wood)			
4	Windspeed MPH			
5	Outside temperature °F			
6	Blower door location			
7	Baseline without blower door on in pa (stack effect)			
8	Blower door configuration: O=open fan A=ring A B=ring B LF= low flow ring			
9	Total CFM50			

10	ZONAL PRESSURES - Blower door		Pre	In-Progress	Post
	ATTIC	WRT house			
	CRAWLSPACE	WRT house			
	GARAGE	WRT house			
	OTHER:	WRT house			
	OTHER:	WRT house			
	OTHER:	WRT house			
11	Location of existing ducts: A=inside B=outside C=inside/outside				
12			12. Duct Pressure Test - Blower Door		

13			13. Room Pressure - HVAC fan only Room WRT main body		Pressure Pan: House WRT Duct		
	Location	S/ Supply R/Return	Pre	Post	Pre	In Progress	Post
a.							
b.							
c.							
d.							
e.							
f.							
g.							
h.							
i.							
j.							
k.							
l.							

	TESTING AIRHANDLER (HVAC) EFFECTS: HVAC fan only	Pre	In-Progress	Post
14	**Dominant Duct Leak Test:** Main Body WRT outside (all interior doors open)			
15	**All Doors Closed Effect:** Main Body WRT outside (all interior doors closed)			
16	Duct location after Wx and Repairs: A=inside B=outside C=inside/outside			
17	Electric furnace heat rise test (*supply°F–return°F*) acceptable range:>40°to<70°			
18	Return house to pre test conditions (Check box when done)	☐	☐	☐

NOTES/DOCUMENTATION:

Pressure Pan Tests

In typical mobile home duct configurations, pre pressure pan tests help locate areas of significant leakage or disconnected duct work. After belly is filled with insulation, post pressure pan tests results may not be useful.

In site built homes with supply and return duct systems enclosed entirely within the thermal and pressure boundaries, pressure pan tests are not required.

Dominant Duct Leak Test

In typical mobile home duct configurations, dominant duct leak tests are especially useful. You can quantify the amount of duct leakage by using the Air Leakage Chart (aka Tooley Chart) if the return is isolated in the conditioned space and the supplies are isolated in the belly. No more than 100CFM of total supply duct leakage is recommended.

In site built homes with supply and return duct systems enclosed entirely within the thermal and pressure boundaries, dominant duct leak tests are not required.

Air Leakage Chart

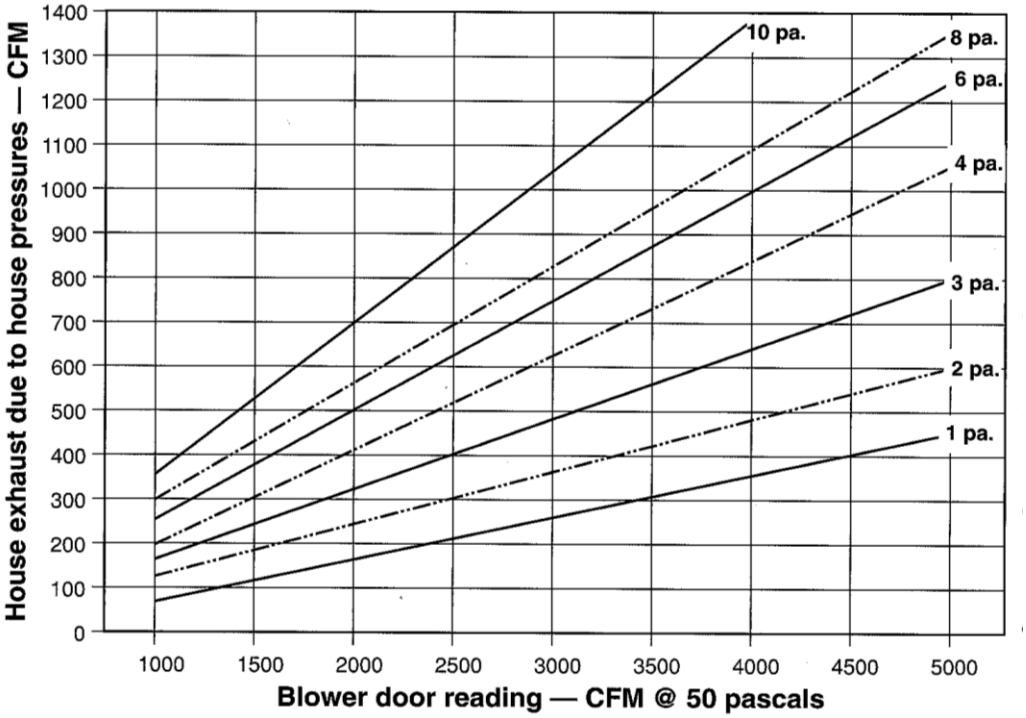

State of Washington, Weatherization Assistance Program

Technical Support Document (TSD)

Diagnostic Test Report

This document is intended to support in detail the Diagnostic Test Report. The Diagnostic Test Report must be filled out in detail for each completed project. You must document in the comments section of the Diagnostic Test Report any special circumstances or health and safety related concerns that might help someone understand the condition of the home (pre- and post-), as well as the concerns expressed by the occupants, or the agency concerns for the occupants safety at the time testing was performed.

The testing procedure outlined in this document is intended to be the minimum tests needed to understand the condition of the home.

Pre Blower Door

i. Client Eligibility date:

Enter date Client was determined eligible. Ensure both Client Eligibility and Energy Audit dates are within the Period of Eligibility. See **Section 1.3, *Period of Eligibility***

ii. Audit Date:

Enter date Energy Audit was performed.

iii. Client Interview Performed?

Answer yes/no

iv. Pollution Source Survey Completed?

Answer yes/no

v. Contaminants Present that would either prohibit blower door test completely, or require pressurization test:

(including but not limited to: Lead, Friable Asbestos, Mold, Smokers, Pets, Sewage, etc)
Document any contaminants or conditions that would prevent blower door testing or require pressurization testing.

vi. Technician:

Enter name of Technician performing: Pre, In-Progress, and Post diagnostic testing.

vii. Date:

Enter date Technician is performing: Pre, In-Progress, and Post diagnostic testing.

Baseline Conditions & House Tightness – Blower Door

Line #7 Primary heat source fuel type (example: nat gas, elec, propane, oil, wood)

Determine by interviewing (not their HIF or Wx application) the occupants, observing their habits and analyzing their heating bills what their primary heat source is and circle the type of fuel that is used in the appliance. Document the type (boiler, woodstove, forced air etc.) in the comments section.

Line #8 Windspeed MPH

Record or estimate wind speed before setting up the blower door. Measure the wind speed with a wind gauge (record if there is apparent steady or gusting wind).

Line #9 Outside temperature °F

Record outside temperature in degrees Fahrenheit

Line #10 Blower door location

Record which doorway the blower door was mounted in for testing procedures. Mount the blower door in the doorway which has the least obstructions in the pathway of airflow (of the blower door) both inside and outside.

Note: Blower door set up procedure: follow manufacturer's instructions.

Line #11 Baseline without blower door on in pa (stack effect)

Measure the house with reference to outside without the blower door running. Make sure the blower door fan is covered and the house is prepared for blower door testing.

Line #12 Blower door configuration O=open fan A=ring A B=ring B LF=low flow ring

Record which ring or configuration (number of holes unplugged) the blower door was set up in for testing lines 13 through 16.

Note: Always use the smallest ring possible to get the highest fan pressure when performing blower door testing. The higher the fan pressure the more accurate the test.

Line #13 Total CFM50

Prepare the house for blower door testing. Normally test should be taken in the negative pressure mode, if positive pressure is used for testing note in the comments section and set up the house per manufacturer's specifications in the blower door manual.

Zonal Pressures – Blower Door

Line# 14 Zonal Pressures

Hook up your manometer as indicated on the field form for each test and record the pressure. Be sure to take verifying tests (house WRT zone, zone WRT outside, etc.). Start in a clockwise direction and describe room on the adjacent line and record pressures, zone WRT outside (confirming test: zone WRT outside).

Line #15 Location of existing ducts:
A=Inside B=outside C=inside/outside

Determine and record where the duct system was designed to be located originally, inside the thermal boundary, outside the thermal boundary, or a combination of inside and outside.

Duct Pressure Test – Blower Door
Line #16 Duct Pressure Test – Pressure Pan
House WRT Duct (clockwise from front door)

Face the front door looking out. Record (down to tenths) whether the duct tested is a supply or return duct and what zone it is located in from line #15. Record whether it is located inside or outside the intended thermal envelope (by design).

Testing Air Handler Effect – HVAC fan only

The tests performed in lines 17 through 19 are performed with only the furnace air handler fan on. The blower door or any exhaust fans should be turned off during these tests. These tests indicate the effect of the air supply and return on pressures in rooms and the house.

Line #17 Room Pressure:
Room WRT Main Body (interior doors closed)

This testing is to see if there are large pressure differentials between rooms of the home that could possibly cause a problem to the operation of the combustion appliance or cause moisture damage the structure of the house.

Line #18 Dominant Duct Leak Test:
Main Body WRT Outside (all interior doors open)

Record the pressure of the main body of the house WRT outside with all interior doors open.

Line #19 All Doors Closed Effect:
Main Body WRT outside (all interior doors closed)

Now close all the interior doors and record main body WRT outside.

Line #20 Duct location after Wx and repair: A=inside B=outside C=inside/outside

Did you change the location of the ducts or are they in the same place as before? If as a result of the retrofit the location (inside to outside, outside to inside, etc.) of the duct system has been changed document in the comments section.

Line #21 Electric furnace heat rise test: Heat Rise = supply°F – return°F

With the electric furnace running, measure the temperature in the supply air plenum and return air plenum. Subtracting the return plenum temperature from the supply air temperature equals the "heat rise". Take these temperature measurements in the plenums as close to the furnace as possible. Record in degrees Fahrenheit. The manufacturer's acceptable range for heat rise for the unit is often on the nameplate of the furnace.

****Action level:** If the heat rise (the difference between return air temp at the plenum and supply air temp at the plenum) is outside the manufacturer's acceptable range the system fails and there must be a referral made for further analysis by a furnace technician. If the heating unit has not been serviced within the last twelve months, a furnace clean and tune is recommended.

Exception: If manufacturer's acceptable heat rise range is unavailable, the default acceptable heat rise range is greater than 40° and less than 70° Fahrenheit.

Line #22 RETURN HOUSE Pre Test Conditions

Check box when done.

Exhaust Fan Testing

Line #23 Exhaust Fan Testing (Actual CFM)

Test and record flow for all exhaust fans (local (source specific) and whole building (whole house)) using exhaust fan flow meter and digital pressure gauge.

Specifications:

Flow Accuracy: ±10% of reading when used with a 1% accurate pressure gauge with a display resolution of 0.1 Pa. (such as a DG-700,)

Flow Range:
Door position E1 44 - 124 cfm
Door position E2 21 - 59 cfm
Door position E3 10 - 28 cfm

ASTM E 84

Standard test method for surface burning characteristics of building materials.

The Flame Spread Index and Smoke Developed Index values obtained by the ASTM E 84 test are used by code officials and regulatory agencies in the acceptance of interior finish materials for various applications. The most widely accepted classification system is described in the National Fire Protection Association publication NFPA 101 *Life Safety Code*

1. 2006 International Building Code

    a. Section 803 Wall and Ceiling Finishes, Paragraph 803.1 General states, "Interior wall and ceiling finishes shall be classified in accordance with ASTM E- 84.Such interior finish materials shall be grouped in the following classes in accordance with their flame spread and smoke-developed indexes.

        i. Class A: Flame Spread 0-25; smoke-developed 0-450

        ii. Class B: Flame Spread 26-75; smoke-developed 0-450

        iii. Class C: Flame Spread 76-200; smoke-developed 0-450

        Class A, B, and C correspond to type I, II, and III respectively in other codes such as SBCCI, BOCA, ICBO. They do not preclude a material being otherwise classified by the authority of jurisdiction.

2. NFPA 101®, Life Safety Code®

    a. Chapter 10 Interior Finish, Contents, and Furnishings, Paragraph 10.2.3 Interior Wall or Ceiling Finish Testing and Classification states, "Interior wall or ceiling finish that is required elsewhere in this Code to be Class A, Class B, or Class C shall be classified based on test results from NFPA 255, ASTM E-84, or UL 723."

Homeowner Name and Address	Agency Name and Address
Phone Number ( )	Phone Number ( )
Job Number	Auditor/Inspector Name

WORK ORDER _____

_____is hereby authorized to complete a clean and tune as prescribed below

Work Order and Procedure for Cleaning and Tuning (Electric) Furnaces

I.CLEAN

A.Air Handling

- ☐ 1. Clean and vacuum heat exchanger if accessible.
- ☐ 2. Clean and vacuum blower, return cabinet, and filter rack so that they are free of dirt, grease, and any foreign matter.
- ☐ 3. Clean and vacuum all supply and return registers and immediate duct openings.
- ☐ 4. Inspect filter. If permanent type, clean as per manufacturer's recommendations. If disposable type, replace with a new filter.
  Filter size: _____ x _____ x _____

II.TUNE

B.Air Handling

- ☐ 1. Check blower and motor bearings. Lubricate as needed.
- ☐ 2. Check belt condition (replace if cracked or worn) and adjust for proper tension.
- ☐ 3. Measure Heat Rise and Adjust blower speed to match manufacturers recommended heat rise.
- ☐ 4. Set fan switch (if possible) so that blower comes on at 110 degrees and goes off at 100 degrees. Set limit no higher than 240 degrees if limit is adjustable.
- ☐ 5. Balance supply distribution for individual homeowners comfort.

CONTRACTOR CERTIFICATION

Are all sequencers operating as designed? yes no

Temperature Rise_____ Signed_____

COMMENTS: _____

_____

AUDITOR/INSPECTOR VERIFICATION

Temperature Rise_____ Signed_____

COMMENTS: _____

_____

_____

Homeowner Name and Address	Agency Name and Address
Phone Number ( )	Phone Number ( )
Job Number	Auditor/Inspector Name

WORK ORDER _____

_____ is hereby authorized to complete a clean and tune as prescribed below.

Work Order and Procedure for Cleaning and Tuning (Gas) Furnaces

I.CLEAN

A. Combustion Area

☐ 1. Brush down all dirt, soot and rust from heat exchanger sections.
☐ 2. Brush down and vacuum all flue passageways within the furnace.
☐ 3. Remove ribbon burners or burner tubes and brush down to remove dirt, soot, loose rust and clean all flame ports. Inspect for cracks in tubes.
☐ 4. Clean gas orifices and assure proper size.
☐ 5. Brush down and vacuum remainder of combustion chamber so that it is free of dirt, soot and loose dust.
☐ 6. Clean pilot orifices and test thermocouple.

B. Flue

☐ 1. Inspect flue pipe from furnace to chimney for rust, weak spots and leaks.
☐ 2. Clean and vacuum flue pipe and reinstall in a secure manner.

C. Air Handling

☐ 1. Clean and vacuum heat exchanger if accessible.
☐ 2. Clean and vacuum blower, return cabinet, and filter rack so that they are free of dirt, grease, and any foreign matter.
☐ 3. Clean and vacuum all supply and return registers and immediate duct openings.
☐ 4. Inspect filter. If permanent type, clean as per manufacturer's recommendations. If disposable type, replace with a new filter.
Filter size: _____ x _____ x _____

COMMENTS: _____

_____

II.TUNE

A.Combustion

☐ 1. Adjust gas output to 3.5" natural or 10.5" L.P.W.C. in the manifold and then clock meter (if possible) to assure the input is within 2% of rated input. NOTE: If gas pressure is correct, and clocked input is more than 2% lower than rated input, check orifices for proper size unless derating is desired. If furnace is over firing and gas pressure is correct, then change to lower orifice size.
☐ 2. Adjust primary air shutter to obtain highest CO_2 or lowest O_2 in the flue (before diverter) without making CO and still maintaining a steady blue flame with slight yellow tips. There must not be any lifting, floating, or jumping flames, or adjust primary air shutter to obtain best flame with lowest possible stack temp without making CO.
☐ 3. Adjust pilot flame just high enough to activate the thermocouple and ignite burner without delay.

- ☐ 4. Furnaces with electronic pilot should ignite without delay.
- ☐ 5. Check igniter to assure that it will lock out after first or second attempt to ignite pilot (LP only).
- ☐ 6. Measure amperage of the gas valve and any other low voltage equipment on the circuit and set thermostat heat anticipator to match.
- ☐ 7. Calibrate thermostat and thermostat thermometer to within 1 degree at 72 degree setting.

B. Air Handling

- ☐ 1. Check blower and motor bearings. Lubricate as needed.
- ☐ 2. Check belt condition (replace if cracked or worn) and adjust for proper tension.
- ☐ 3. If stack temperature is above 450 degrees net, increase blower speed to deliver more heat and lower stack temperature. NOTE: Stack temperatures should not be below 350 degrees net. If so, decrease blower speed slightly (NOTE: This may not work on all furnaces) or adjust blower to obtain greatest rise at the supply plenum.
- ☐ 4. Set fan switch (if possible) so that blower comes on at 110 degrees and goes off at 100 degrees. Set limit at no higher than 240 degrees if limit is adjustable.
- ☐ 5. Balance supply distribution for individual homeowners comfort.

COMMENTS: _____

_____

CONTRACTOR CERTIFICATION

Final Stack Temp_____ CO2 or O2_____

Clocked Input (Where Applicable)_____ CO_____ PPM

Anticipator Setting_____ SSE_____ %

Temperature Rise_____ Signed_____

COMMENTS: _____

_____

AUDITOR/INSPECTOR VERIFICATION

Final Stack Temp_____ CO2 or O2_____

Clocked Input (Where Applicable)_____ CO_____ PPM

Anticipator Setting_____ SSE_____ %

Temperature Rise_____ Signed_____

COMMENTS: _____

_____

Homeowner Name and Address	Agency Name and Address
Phone Number ( )	Phone Number ( )
Job Number	Auditor/Inspector Name

WORK ORDER _____

_____ is hereby authorized to complete a clean and tune as prescribed below.

Work Order and Procedure for Cleaning and Tuning (Oil) Furnaces

I. CLEAN

A. Combustion Area

☐ 1. Brush down all dirt, soot and rust from heat exchanger sections.
☐ 2. Brush down and vacuum all flue passageways within the furnace.
☐ 3. Remove draw assembly clean and align ignition electrodes..
☐ 4. Clean blast tube and flame head.
☐ 5. Replace nozzle with same size or lower size if derating is possible or desirable.
☐ 6. Brush down and vacuum remainder of combustion chamber so that it is free of dirt, soot and loose rust.
☐ 7. Replace oil line filter cartridge.

B. Flue

☐ 1. Inspect flue pipe from furnace to chimney for rust, weak spots and leaks.
☐ 2. Clean and vacuum flue pipe and reinstall in a secure manner.
☐ 3. Clean and check barometric damper for proper operation.

C. Air Handling

☐ 1. Clean and vacuum heat exchanger if accessible.
☐ 2. Clean and vacuum blower, return cabinet, and filter rack so that they are free of dirt, grease, and any foreign matter.
☐ 3. Clean and vacuum all supply and return registers and immediate duct openings.
☐ 4. Inspect filter. If permanent type, clean as per manufacturer's recommendations. If disposable type, replace with a new filter.

COMMENTS: _____

_____

_____

_____

II.TUNE

A. Combustion

☐ 1. Seal all joints, cracks and openings that would allow air to infiltrate into the combustion area of the furnace.
☐ 2. Adjust barometric damper so that a reading of .02-.09" W.C. at the breech is obtained.
☐ 3. Adjust primary air shutter to obtain highest CO2 the flue (before barometric damper) with a smoke of 0 to 2 while still maintaining a steady flame. (0-1 on the flame retention burners)
☐ 4. Measure amperage of primary control and set thermostat heat anticipator to match.
☐ 5. Calibrate thermostat thermometer to within 1 degree at 72 degree setting.

B. Air Handling

☐ 1. Check blower and motor bearings. Lubricate as needed.

- ☐ 2. Check belt condition (replace if cracked or worn) and adjust for proper tension.
- ☐ 3. If stack temperature is above 550 degrees, increase blower speed to deliver more heat and lower stack temperature. NOTE: Stack temperatures should not be below 350 degrees net. If so, decrease blower speed slightly (NOTE: This may not work on all furnaces) or adjust blower to obtain greatest rise at the supply plenum.
- ☐ 4. Set fan switch (if possible) so that blower comes on at 120 degrees and goes off at 100 degrees. Set limit at no higher than 240 degrees if limit is adjustable.
- ☐ 5. Test fan and limit control for proper operation.
- ☐ 6. Adjust supply register on plenum (if so equipped) to supply between 100 and 125 CFM.
- ☐ 7. Balance supply distribution for individual homeowners comfort.

COMMENTS: _____
_____
_____
_____

CONTRACTOR CERTIFICATION

I certify that the work specified above (see items checked in Clean and Tune sections) has been completed and that all requirements have been met.

A post-clean and tune efficiency rating of _____% has been achieved.

Net Stack Temp _____ CO2 _____ or O2 _____ Smoke _____

Signed_____

COMMENTS: _____
_____
_____
_____

AUDITOR/INSPECTOR VERIFICATION

I certify that the work specified above (see items checked in Clean and Tune sections) has been completed and that all requirements have been met.

A post-clean and tune efficiency rating of _____% has been achieved.

Net Stack Temp _____ CO2 _____ or O2 _____ Smoke _____

Signed

COMMENTS: _____
_____
_____
_____

Homeowner Name and Address	Agency Name and Address
Phone Number ( )	Phone Number ( )
Job Number	Auditor/Inspector Name

WORK ORDER _____

_____ is hereby authorized to complete a clean and tune as prescribed below.

Work Order and Procedure for Oil Retrofit

I.CLEAN

A. Combustion Area

☐ 1. Remove existing burner unit.
☐ 2. Brush down all dirt, soot and rust from heat exchanger sections.
☐ 3. Brush down and vacuum all flue passageways within the boiler or fireplace.
☐ 4. Brush down and vacuum remainder of combustion chamber so that it is free of dirt, soot and loose rust.

B. Flue

☐ 1. Inspect flue pipe from furnace to chimney for rust, weak spots and leaks.
☐ 2. Clean and vacuum flue pipe and reinstall in a secure manner. NOTE: Depending on the size of the original flue pipe, it might be desirable to install a new flue pipe of smaller diameter.
☐ 3. Inspect, repair and/or replace barometric damper to operate as designed..

C. Air Sealing

☐ 1. Seal all joints and seams that would allow air from the room or surrounding area to enter any part of the combustion side of the heating unit.
☐ 2. Seal any and all doors or access covers between the combustion areas and the outside of the heating unit.

D. Distribution (Boilers)

☐ 1. Inspect and test pressure relief valve.
☐ 2. Inspect circulator pump for safe and effective operation paying close attention to couplings and motor condition.
☐ 3. Purge expansion tank.
☐ 4. Check condition of water. If it is rusty or has a high level of sludge, then drain, flush and refill the system adding proper treatment.
☐ 5. Check operation of radiator valves.

OR

D. Distribution (Air Furnaces)

☐ 1. Clean and vacuum blower, return cabinet, and filter rack so that they are free of dirt, grease, and any foreign matter.
☐ 2. Clean out (if needed) supply and return registers and grilles.
☐ 3. Seal up any large openings or damage to duct work.

COMMENTS: _____

_____

_____

_____

II.INSTALLATION AND TUNING

A. Installation

☐ 1. Install a power oil flame retention burner, which is capable of hot gas recirculation.
☐ 2. Seal around blast tube, flange and adaptor plate. NOTE: Pay close attention to resizing new burner for correct post weatherization heat loss.

B. Combustion

☐ 1. Minimum S.S.E. of 80%.
☐ 2. Adjust primary air shutter to obtain a minimum CO2 of 11%, but not higher than 12.5%, or O2 lowest not more than 7% in the flue without making smoke. NOTE: Net stack temp must not be less than 375 degrees F.
☐ 3. Measure amperage of primary control combined with any other load that may be on the low voltage control circuit and set thermostat heat anticipator to match.
☐ 4. Calibrate thermostat and thermostat thermometer to within 1 degree at 72 degree setting.

C. Distribution Boilers

☐ 1. Bleed all radiators to insure no air is in the system on hot water systems.
☐ 2. Lubricate circulator pump as needed.
☐ 3. Check operation of zone control valves if any. Lubricate as needed.
☐ 4. Check each radiator for output.

D. Air Handling

☐ 1. Check blower and motor bearings. Lubricate as needed.
☐ 2. Check belt condition (replace if cracked or worn) and adjust for proper tension.
☐ 3. If stack temperature is above 450 degrees net, increase blower speed to deliver more heat and lower stack temperature. NOTE: Stack temperatures should not be below 350 degrees net. If so, decrease blower speed slightly (NOTE: This may not work on all furnaces) or adjust blower to obtain greatest temp rise at the supply plenum.
☐ 4. Set fan switch (if possible) so that blower comes on at 120 degrees and goes off at 100 degrees. Set limit at no higher than 240 degrees if limit is adjustable.
☐ 5. Balance supply distribution for individual homeowners comfort.

COMMENTS: _____

_____

CONTRACTOR CERTIFICATION

Final Stack Temp _____ (Before Barometer Damper) Anticipator Setting
CO2 _____ or O2 Smoke _____Draft cy/c
SSE _____

Signed_____

COMMENTS: _____

_____

AUDITOR/INSPECTOR VERIFICATION

Stack Temp _____ CO2 _____ or O2 Smoke _____

Signed_____

COMMENTS: _____

_____

CAUTION:

The state recommends that water heaters be set no higher than 120°F, or the minimum setting if it cannot be set at the specific temperature. While you are not required to adjust the temperature setting, be aware of the dangers, particularly to small children, of what water can do at 130°F and higher.

Temperature	Scalding Time
150°F	2 seconds
140°F	10 seconds
130°F	30 seconds
120°F	10 minutes

You will save energy at lower settings. NOTE: Many dishwasher manufacturers recommend 130°F for adequate cleaning with their equipment, some testing at different temperatures may be advisable.

Landlords and Tenants Residential Units Only: The state requires the 120°F setting on accessible, individual water heaters furnished in a leased or rented unit at the time of occupancy by a new tenant. (RCW 19.27.120)

Cost Effective Guidelines example –

Under Construction

STANDARDS FOR WEATHERIZATION MATERIALS

If the standards listed in this appendix conflict with those required by current local codes, the local code shall have precedence and a copy of the applicable section will be retained with procurement records.

The following Government standards are produced by the Consumer Product Safety Commission and are published in title 16, Code of Federal Regulations:

Thermal Insulating Materials for Building Elements Including Walls, Floors, Ceilings, Attics, and Roofs Insulation—organic fiber—conformance to Interim Safety Standard in 16 CFR part 1209;

Fire Safety Requirements for Thermal Insulating Materials According to Insulation Use—Attic Floor—insulation materials intended for exposed use in attic floors shall be capable of meeting the same flammability requirements given for cellulose insulation in 16 CFR part 1209;

Enclosed spaces—insulation materials intended for use within enclosed stud or joist spaces shall be capable of meeting smoldering combustion requirements in 16 CFR part 1209.

The following standards which are not otherwise set forth in part 440 are incorporated by reference and made part of part 440. The following standards have been approved for incorporation by reference by the Director of the Federal Register in accordance with 5 U.S.C. 552(a) and 1 CFR part 51. These materials are incorporated as they exist on January 3, 2002 and a notice of any change in these materials will be published in the FEDERAL REGISTER. The standards incorporated by reference are available for inspection at the Office of the Federal Register Information Center, 800 North Capitol Street, Suite 700, Washington, DC 20001.

The standards incorporated by reference in part 440 can be obtained from the following sources:

Air Conditioning and Refrigeration Institute, 4301 N. Fairfax Drive, Suite 425, Arlington, VA 22203; (703) 524-8800; www.ari.org.

American Architectural Manufacturers Association, 1827 Walden Office Square, Suite 104, Schaumburg, Illinois 60173-4268; (847) 303-5664; www.aamanet.org.

American Gas Association, 400 N. Capitol Street, NW, Washington, DC 20001; (202) 824-7000; www.aga.org.

American National Standards Institute, Inc., 11 West 42nd Street, New York, NY 10036; (212) 642-4900; www.ansi.org.

American Society of Mechanical Engineers, Three Park Avenue, New York, NY 10016-5990; (212) 591-7722; www.asme.org.

American Society for Testing and Materials, 100 Barr Harbor Drive, West Conshohocken, PA 19428-2959; (610) 832-9585; www.astm.org.

Association of Home Appliance Manufacturers, 1111 19th Street, NW, Suite 402, Washington DC, 20036; (202) 872-5955; www.aham.org.

Federal Specifications, General Services Administration, General Services Administration, Federal Supply Service, Office of the CIO and Marketing Division, Room 800, 1941 Jefferson Davis Hwy., Arlington, VA 22202; (703) 305-6288; www.gsa.gov.

Gas Appliance Manufacturers Association, 2107 Wilson Boulevard, Suite 600, Arlington, Virginia 22201; (703) 525-7060 www.gamanet.org.

National Electrical Manufacturers Association, 1300 North 17th Street, Suite 1847, Rosslyn, VA 22209; (703) 841-3200; www.nema.org.

National Fire Protection Association, 1 Batterymarch Park, P.O. Box 9101, Quincy, MA 02269-9101; (617) 770-3000; www.nfpa.org.

Sheet Metal and Air Conditioning Contractors Association, 4201 Lafayette Center Drive, Chantilly, Virginia 20151-1209; (703) 803-2980; www.smacna.org.

Solar Rating and Certification Corporation, c/o FSEC, 1679 Clearlake Road, Cocoa, FL 32922-5703; (321) 638-1537; www.solar-rating.org.

Steel Door Institute, 30200 Detroit Road, Cleveland, OH 44145-1967; (440) 899-0010; www.steeldoor.org.

Steel Window Institute, 1300 Sumner Avenue, Cleveland, OH 44115-2851; (216) 241-7333; www.steelwindows.com.

Tubular Exchanger Manufacturers Association, 25 North Broadway, Tarrytown, NY 10591; (914) 322-0040; www.tema.org.

Underwriters Laboratories, Inc., 333 Pfingsten Road, Northbrook, IL 60062-2096; (847) 272-8800; www.ul.com.

Window & Door Manufacturers Association, 1400 East Touhy Avenue, Suite 470, Des Plaines, IL 60018; (800) 223-2301; www.nwwda.org.

More information regarding the standards in this reference can be obtained from the following sources:

Environmental Protection Agency, 401 M Street, NW, Washington, DC 20006; (202) 554-1080; www.epa.gov.

National Institute of Standards and Technology, U.S. Department of Commerce, Gaithersburg, MD 20899; (301) 975-2000; www.nist.gov.

Weatherization Assistance Program, Office of Building Technology Assistance, Energy Efficiency and Renewable Energy, 1000 Independence Avenue, SW, EE-42, Washington, DC 20585-0121; (202) 586-4074; www.eere.energy.gov/weatherization.

Thermal Insulating Materials for Building Elements including Walls, Floors, Ceilings, Attics, and Roofs

[Standards for conformance]	
Insulation--mineral fiber:	
Blanket insulation	ASTM[1] C665-01e1.
Roof insulation board	ASTM C726-05.
Loose-fill insulation	ASTM C764-04.
Insulation--mineral cellular:	
Vermiculite loose-fill insulation	ASTM C516-02.
Perlite loose-fill insulation	ASTM C549-02.
Cellular glass insulation block	ASTM C552-03.
Perlite insulation board	ASTM C728-05.
Insulation–organic fiber:	
Cellulosic fiber insulating board	ASTM C208-95 (2001).
Cellulose loose-fill insulation	ASTM C739-03e1.
Cellulose wet-spray insulation	ASTM C1149-02 or ASTM C1497-04.
Insulation–organic cellular:	
Preformed block-type polystyrene insulation	ASTM C578-05.
Rigid preformed polyurethane insulation board	ASTM C591-01.
Faced rigid cellular polyurethane or polyisocyanurate insulation board	ASTM C1289-05.
Spray-applied rigid cellular polyurethane insulation	ASTM C1029-05.
Spray-applied bio-based polyurethane semi-open celled insulation	ASTM C1029-05, as amended by Table 2 of ICC[2] AC12.
Insulation–composite boards:	
Mineral fiber insulation board	ASTM C726-05.
Perlite board	ASTM C728-05.
Gypsum board and polyurethane or polisocyanurate composite board	ASTM C1289-05.
Materials used as a patch to reduce infiltration through the building envelope	Commercially available.

[1] ASTM indicates American Society for Testing and Materials.
[2] ICC indicates International Code Council.

Thermal Insulating Materials for Pipes, Ducts, and Equipment Such as Boilers and Furnaces

[Standards for conformance]	
Insulation–mineral fiber:	
Preformed pipe insulation	ASTM[1] C547-03.
Blanket and felt insulation (industrial type)	ASTM C553-02.
Glass fiber felt insulation	ASTM C1086-96 (2004).
Blanket insulation and blanket type pipe insulation (metal-mesh covered, industrial type)	ASTM C592-04.
Block and board insulation	ASTM C612-04.
Spray applied mineral fiber thermal and sound absorbing insulation	ASTM C1014-03.
High-temperature fiber blanket insulation	ASTM C892-00.
Duct work insulation	ASTM C1290-00.
Insulation–mineral cellular:	
Calcium silicate block and pipe insulation	ASTM C533-95.
Cellular glass insulation	ASTM C552-00.
Expanded perlite block and pipe insulation	ASTM C610-99.
Insulation–organic cellular:	
Preformed flexible elastomeric cellular insulation in sheet and tubular form	ASTM C534-99.
Unfaced preformed rigid cellular polyurethane insulation	ASTM C591-00.
Foil-faced flexible polyethylene sheet insulation	ASTM C1224-03.
Insulation skirting	Commercially available.

[1] ASTM indicates American Society for Testing and Materials.

Fire Safety Requirements for Insulating Materials According to Insulation Use

[Standards for conformance]	
Attic floor	Insulation materials intended for exposed use in attic floors shall be capable of meeting the same smoldering combustion requirements given for cellulose insulation in ASTM[1] C739-03e1.

[1] ASTM indicates American Society for Testing and Materials.

Fire Safety Requirements for Insulating Materials According to Insulation Use
Continued

[Standards for conformance]

Enclosed space	Insulation materials intended for use within enclosed stud or joist spaces shall be capable of meeting the same smoldering combustion requirements given for cellulose insulation in ASTM[1] C739-03e1.
Exposed interior walls and ceilings	Insulation materials, including those with combustible facings, which remain exposed and serve as wall or ceiling interior finish, shall have a flame spread classification not to exceed 150 (per ASTM E84-05).
Exterior envelope walls and roofs	Exterior envelope walls and roofs containing thermal insulation shall meet applicable local government building code requirements for the complete wall or roof assembly.
Pipes, ducts, and equipment	Insulation materials intended for use on pipes, ducts, and equipment shall be capable of meeting a flame spread classification not to exceed 150 (per ASTM E84-05).

[1] ASTM indicates American Society for Testing and Materials.

Storm Windows

[Standards for conformance]

Storm windows:	
All storm windows	AAMA/NWWDA[1] 101/I.S. 2-97.
Aluminum frame storm windows.....	AAMA[2] 1002.10-93.
Rigid vinyl frame storm windows.....	ASTM[3] D4726-02.
Frameless plastic glazing storm	Required minimum thickness for windows is 6 mil (0.006 inches).
Movable insulation systems for windows...	Commercially available.

[1] AAMA/NWWDA indicates American Architectural Manufacturers Association/National Wood Window & Door Association (now the Window & Door Manufacturers Association).
[2] AAMA indicates American Architectural Manufacturers Association.
[3] ASTM indicates American Society for Testing and Materials.

Replacement Windows

[Standards for conformance]

Replacement windows:	
All windows.....	AAMA/NWWDA[1] 101/I.S. 2-97.
Steel frame windows	Steel Window Institute recommended specifications for steel windows, Dec 2002.
Rigid vinyl frame windows	ASTM[2] D4726-02

[1] AAMA/NWWDA indicates American Architectural Manufacturers Association/National Wood Window & Door Association (now the Window & Door Manufacturers Association).
[2] ASTM indicates American Society for Testing and Materials.

Storm Doors

[Standards for conformance]

Storm doors:	
All storm (glass) doors....	AAMA/NWWDA[1] 101/I.S. 2-97.
Aluminum frame storm doors	AAMA[2] 1102.7-89.
Sliding glass storm doors	AAMA 1002.10-93.
Rigid vinyl storm doors	ASTM[3] D3678-97 (2001) and D4726-02.
Vestibules:	
Materials to construct vestibules	Commercially available.

[1] AAMA/NWWDA indicates American Architectural Manufacturers Association/National Wood Window & Door Association (now the Window & Door Manufacturers Association).
[2] AAMA indicates American Architectural Manufacturers Association.
[3] ASTM indicates American Society for Testing and Materials.

REPLACEMENT DOORS

[Standards for conformance]	
Replacement doors:	
All replacement doors .	AAMA/NWWDA[1] 101/I.S. 2-97.
Steel doors.....	ANSI[2] A250.8-03.
Wood doors:	
Flush doors	ANSI/NWWDA[3] I.S. 1-97 (Amendment, exterior door provisions).
Stile and rail doors...	NWWDA[4] I.S. 6-97.

[1] AAMA/NWWDA indicates American Architectural Manufacturers Association/National Wood Window & Door Association (now the Window & Door Manufacturers Association).
[2] ANSI indicates American National Standards Institute.
[3] ANSI/NWWDA indicates American National Standards Institute/National Wood Window & Door Association (now the Window & Door Manufacturers Association).
[4] NWWDA indicates National Wood Window & Door Association (now the Window & Door Manufacturers Association).

CAULKS AND SEALANTS

[Standards for conformance]	
Caulks and sealants:	
Glazing compounds for metal sash.....	Commercially available.
Oil and resin base caulks	Commercially available.
Acrylic (solvent type) sealants.....	ASTM C920-05.
Butyl rubber sealants	FS[2] Commercial Item Description A-A-272 (10/19/99).
Chlorosulfonated poly-ethylene sealants	ASTM C920-05.
Latex sealing compounds.....	ASTM C834-05.
Elastomeric joint sealants (normally considered to include polysulfide, poly-urethane, and silicone)	ASTM C920-05.
Preformed gaskets and sealing materials	ASTM C509-00.
Duct sealing mastic.....	UL[3] 181A, Third Edition, 2005 and UL 181B, Second Edition, 2005.

[1] ASTM indicates American Society for Testing and Materials.
[2] FS indicates Federal Specifications.
[3] UL indicates Underwriters Laboratories.

WEATHERSTRIPPING

[Standards for conformance]	
Weatherstripping	Commercially available.
Door sweeps	Commercially available.
Vapor retarders	Selected according to the provisions cited in ASTM[1]C755-03. Permeance not greater than 1 perm when determined according to the desiccant method described in ASTM E96-00e1.
Items to improve attic ventilation.....	Commercially available.

[1] ASTM indicates American Society for Testing and Materials.

HEAT EXCHANGERS

[Standards for conformance]	
Heat exchangers, water-to-water and steam-to-water	ASME[1] Boiler and Pressure Vessel Code, 2004, Sections II, V, VIII, IX, and X, as applicable to pressure vessels. Standards of Tubular Exchanger Manufacturers Association, Eighth Edition, 1999.
Heat exchangers with gas-fired appliances[2]...	ANSI/UL[3] 462, Second Edition, 1993.

[1] ASME indicates American Society for Mechanical Engineers.
[2] The heat reclaimer is for installation in a section of the vent connector from appliances equipped with draft hoods or appliances equipped with powered burners or induced draft and not equipped with a draft hood.
[3] ANSI/UL indicates American National Standards Institute/Underwriters Laboratories.

BOILER/FURNACE CONTROL SYSTEMS

	[Standards for conformance]
Automatic set back thermostats	Listed by UL[1]. Conformance to NEMA[2] DC3-2003.
Line voltage or low voltage room thermostats	Listed by UL. Conformance to NEMA DC3-2003.
Clock thermostats	Listed by UL. Conformance to NEMA DC3-2003.
Automatic gas ignition systems	ANSI[3] Z21.21-2001. AGA[4] Laboratories Certification Seal.
Energy management systems	Listed by UL.
Hydronic boiler controls	Listed by UL.
Other burner controls	Listed by UL.

[1] UL indicates Underwriters Laboratories.
[2] NEMA indicates National Electrical Manufacturers Association.
[3] ANSI indicates American National Standards Institute.
[4] AGA indicates American Gas Association.

WATER HEATER MODIFICATIONS

	[Standards for conformance]
Insulate tank and distribution piping	(See insulation section of this appendix)
Install heat traps on inlet and outlet piping	Applicable local plumbing code.
Install/replace water heater heating elements	Listed by UL[1].
Electric, freeze-prevention tape for pipes	Listed by UL.
Install stack damper, gas-fueled	ANSI[2] Z21.66-1996, including Exhibits A & B, and ANSI Z223.1-2003 (same as NFPA[3] 54-2002 and International Fuel Gas Code -2003).

[1] UL indicates Underwriters Laboratories.
[2] ANSI indicates American National Standards Institute.
[3] NFPA indicates National Fire Prevention Association.

WATER HEATER MODIFICATIONS
Continued

	[Standards for conformance]
Install stack damper, oil-fueled	UL[1] 17, Third Edition, 1994, NFPA[2] 31-2001, NFPA 211-2003 (same as ANSI[3] A52.1), and ANSI/ NFPA 70-2005 (same as IEEE[4] National Electrical Code).
Install water flow modifiers	Commercially available.

[1] UL indicates Underwriters Laboratories.
[2] NFPA indicates National Fire Prevention Association.
[3] ANSI indicates American National Standards Institute.
[4] IEEE indicates Institute of Electrical and Electronics Engineers.

REPLACEMENT WATER HEATERS

	[Standards for conformance]
Electric (resistance) water heaters	10 CFR[1] 430 and UL[3] 174.
Heat pump water heaters	UL 1995, Third Edition, 2005. Electrical components to be listed by UL.
Gas water heaters:	
Rated #75 kBtu/hr	10 CFR 430 and ANSI[4] Z21.10.1-2005.
Rated >75 kBtu/hr	ANSI Z21.10.3-2004.
Oil water heaters	UL 732, Fifth Edition, 1995.

[1] CFR indicates Code of Federal Regulations.
[2] UL indicates Underwriters Laboratories.
[3] ANSI indicates American National Standards Institute.

SOLAR WATER HEATING SYSTEMS[1]

	[Standards for conformance]
Solar water heating systems including forced circulation, integral collector storage, thermo-syphon, and self-pumping systems	System must be certified per SRCC[2] OG 300, May 2002.

[1] Solar water heating systems for weatherization-eligible households should be hybrid systems with a back-up source of hot water.
[2] SRCC indicates Solar Rating and Certification Corporation.

WASTE HEAT RECOVERY DEVICES

[Standards for conformance]	
Desuperheater/water heaters	ARI[1] 470-2001 and UL 1995, Third Edition, 2005.
Condensing heat exchangers	Commercially available components installed per manufacturers' specifications. NFPA[2] 211-2003 (same as ANSI A52.1) may apply in certain instances. See also the Heat Exchangers section of this appendix.
Heat pump water heating heat recovery systems	UL 1995, Third Edition, 2005. Electrical components to be listed by UL.
Energy recovery equipment	Energy Systems Analysis and Management, 1997 (SMACNA[3]).

[1] ARI indicates Air Conditioning and Refrigeration Institute.
[2] NFPA indicates National Fire Prevention Association.
[3] SMACNA denotes Sheet Metal and Air Conditioning Contractors' National Association.

BOILER REPAIR AND MODIFICATIONS/ EFFICIENCY IMPROVEMENTS

[Standards for conformance]	
Install gas conversation burners	ANSI[1] Z21.8-1994 (for gas- or oil-fired systems), ANSI Z21.17-1998, and ANSI Z223.1-2003 (same as NFPA[2] 54-2002 and International Fuel Gas Code). AGA[3] Laboratories Certification Seal.
Replace oil burner	UL[4] 296, Tenth Edition, 2003 and NFPA 31-2001.
Install burners (oil/gas)	ANSI Z223.1-2003 for gas equipment and NFPA 31-2001 for oil equipment.

[1] ANSI indicates American National Standards Institute.
[3] NFPA indicates National Fire Prevention Association.
[3] AGA indicates American Gas Association.
[4] UL indicates Underwriters Laboratories.

BOILER REPAIR AND MODIFICATIONS/ EFFICIENCY IMPROVEMENTS—Continued

[Standards for conformance]	
Re-adjust boiler water temperature or install automatic boiler temperature reset control	ASME[1] CSD-1-2004, ANSI[2] Z223.1-2003, and NFPA[3] 31-2001.
Replace/modify boilers	ASME Boiler and Pressure Vessel Code, 2004, Section II, IV, V, VI, VIII, IX, and X. Boilers must be Hydronics Institute Division of GAMA[4] equipment.
Clean heat exchanger, adjust burner air shutter(s), check smoke no. on oil-fueled equipment. Check operation of pump(s) and replacement filters	Per manufacturers' instructions.
Replace combustion chambers	Refractory linings may be required for conversions.
Replace heat ex-changers, tubes	Protection from flame contact with conversion burners by refractory shield.
Install/replace thermo-static radiator valves	Commercially available. One-pipe steam systems require air vents on each radiator; see manufacturers' requirements.
Install boiler duty cycle control system	Commercially available. ANSI/NFPA 70-2005 (same as IEEE[5] National Electrical Code) and local electrical code provisions for wiring.

[1] ASME indicates American Society for Mechanical Engineers
[2] ANSI indicates American National Standards Institute.
[3] NFPA indicates National Fire Prevention Association.
[4] GAMA indicates Gas Appliance Manufacturers Association.
[3] IEEE indicates Institute of Electrical and Electronics Engineers.

HEATING AND COOLING SYSTEM REPAIRS AND TUNE-UPS/EFFICIENCY IMPROVEMENTS

[Standards for conformance]	
Install duct insulation	ASTM[1] C612-04 (see insulation sections of this appendix).
Reduce Input of burner; derate gas-fueled equipment	Local utility company and procedures if applicable for gas-fueled furnaces and ANSI[2] Z223.1-2003 (same as NFPA[3] 54-2002) including Appendix H.
Repair/replace oil-fired equipment	NFPA 31-2001.
Replace combustion chamber in oil-fired furnaces or boilers	NFPA 31-2001.
Clean heat exchanger and adjust burner; adjust air shutter and check CO_2 and stack temperature. Clean or replace air filter on forced air furnace	ANSI Z223.1-2003 (same as NFPA 54-2002) including Appendix H.
Install vent dampers for gas-fueled heating systems.....	Applicable sections of ANSI Z223.1-20039 (same as NFPA 54-2002) including Appendix H, I, J, and K. ANSI Z21.66-1996 and Exhibits A&B for electrically operated dampers.
Install vent dampers for oil-fueled heating systems.....	Applicable sections of NFPA 31-2001 for installation and in conformance with UL[4] 17, Third Edition, 1994.

[1] ASTM indicates American Society for Testing and Materials.
[2] ANSI indicates American National Standards Institute.
[3] NFPA indicates National Fire Prevention Association.
[4] UL indicates Underwriters Laboratories.

HEATING AND COOLING SYSTEM REPAIRS AND TUNE-UPS/EFFICIENCY IMPROVEMENTS—Continued

[Standards for conformance]	
Reduce excess combustion air:	
A: Reduce vent connector size of gas-fueled appliances	ANSI[1] Z223.1-2003 (same as NFPA[2] 54-2002) Part 9 and Appendices G&H.
B: Adjust barometric draft regulator for oil fuels	NFPA 31-2001 and per furnace and boiler manufacturers' instructions.
Replace constant burning pilot with electronic ignition device on gas-fueled furnaces or boilers	ANSI Z21.71-2005.
Readjust fan switch on forced air gas- or oil-fueled furnaces	Applicable sections on Appendix H of ANSI Z223.1-2003 (same as NFPA 31-2002) for gas furnaces and NFPA 31-2001 for oil furnaces.
Replace burners	See install burners (oil/gas).
Install/replace duct furnaces (gas)	ANSI Z223.1-2003 (same as NFPA 31-2002).
Install/replace heat pumps	ARI[3] 210/240-2003. UL[4] 1995 Third Edition, 2005.
Replace air diffusers, intakes, registers, and grilles	Commercially available.
Install/replace warm air heating metal ducts	UL 181, Tenth Edition 2005, including UL 181A, Third Edition 2005 and 181B, Second Edition, 2005.
Filter alarm unit.....	Commercially available.

[1] ANSI indicates American National Standards Institute.
[2] NFPA indicates National Fire Prevention Association.
[3] ARI indicates Air-Conditioning and Refrigeration Institute.
[4] UL indicates Underwriters Laboratories.

Replacement Furnaces, Boilers, and Wood Stoves

[Standards for conformance]

Chimneys, fireplaces, vents and solid fuel burning appliances.....	NFPA[1] 211-2003 (same as ANSI[2] A52.1).
Gas-fired furnaces.....	ANSI Z21.47-2004 and ANSI Z223.1-2003 (same as NFPA 54-2002).
Oil-fired furnaces.....	UL[3] 727, Eighth Edition, 1994 and NFPA 31-2001.
Liquefied petroleum gas storage.....	NFPA 58-2004.
Ventilation fans:	
Including electric attic, ceiling, and whole-house fans.....	UL 507, Ninth Edition, 1999.

[1] NFPA indicates National Fire Prevention Association.
[2] ANSI indicates American National Standards Institute.
[3] UL indicates Underwriters Laboratories.

Electric Motors and Motor Controls

[Standards for conformance]

All electric motors	UL[1] 1004, Fifth Edition, 1994.
Variable-speed drives.....	Listed by UL.

[1] UL indicates Underwriters Laboratories.

Air Conditioners and Cooling Equipment

[Standards for conformance]

Air conditioners:	
Central air conditioners ...	ARI[1] 210/240-2003.
Room size units	ANSI/AHAM[2] RAC 1-2003.
Other cooling equipment:	
Including evaporative coolers, heat pumps, and other equipment....	UL[3] 1995, Third Edition, 2005.

[1] ARI indicates Air Conditioning and Refrigeration Institute.
[2] ANSI/AHAM indicates American National Standards Institute/Association of Home Appliance Manufacturers.
[3] UL indicates Underwriters Laboratories.

Screens, Window Films, and Reflective Materials

[Standards for conformance]

Insect screens	Commercially available.
Window films	Commercially available.
Shade screens:	
Fiberglass shade screens.....	Commercially available.
Polyester shade screens.	Commercially available.
Rigid awnings:	
Wood rigid awnings	Commercially available.
Metal rigid awnings	Commercially available.
Louver systems:	
Wood louver awnings.....	Commercially available.
Metal louver awnings	Commercially available.
Reflective roof coating.....	Energy Star criteria for reflective roof products.

Refrigerators

[Standards for conformance]

Refrigerator/freezers (does not include freezer-only units)	UL[1] 250. Replaced units must be disposed of properly per Clean Air Act 1990, Section 608, as amended by 40 CFR[2] 82, May 14, 1993.

[1] UL indicates Underwriters Laboratories.
[2] CFR indicates Code of Federal Regulations.

Fluorescent Lamps and Fixtures

[Standards for conformance]

Compact fluorescent lamps	ANSI/UL[1] 542, Eighth Edition, 1999, and UL 1993, First Edition, 1993.
Fluorescent lighting fixtures	UL 1598, Second Edition, 2004.

[1] ANSI/UL indicates American National Standards Institute/Underwriters Laboratories.

Fund Matrix

Page 1

Revised July 1, 2014

Recommended Measure Funding Priorities			
This matrix provides guidance for recommended payment by Weatherization Program measure type. The funding sources are shown from highest priority at the top to lowest at the bottom. Use local discretion as funding sources and leveraging opportunities allow.			
Priority	**WxM**	**H&S**	**WRR**
1.	Utility	MM	MM
2.	DOE	HHS	HHS
3.	BPA	BPA	BPA
4.	HHS	Utility	Utility
5.	MM	DOE	DOE

2014 DOE Average Cost Per Unit (ACPU) = $6987.
This average includes units computed in a multi-family building of 5 units or greater.

DOE programs are the only Wx funding sources with an Average Cost Per Unit (ACPU) limit.

Budget categories included in Savings to Investment (SIR):
Weatherization Measures and Weatherization-Related Repairs.

Budget categories **NOT** included in SIR:
Health & Safety Measures, Program Support, Other Program Operations, Administration, and Training and Technical Assistance.

For PSE and PUD, see Special Terms and Conditions for each program.
Note: All allowable expenses are contingent on current policies. See Chapter 5, Providing Weatherization Services.

Activities/ Measures	**Fund Source**	**Allowable Expense?**	**Specifics/Limitations/Allowances**	**Include cost in SIR?** (Individual measure & total package)
Air Sealing	DOE	Yes		Yes
	HHS	Yes		Yes
Policy 5.3.3	BPA	Yes	Electric heat and BPA service territory only	Yes
	MM	Yes		Yes
Appliances	DOE	No		
	HHS	No		
Refrigerator Replacement (see below),	BPA	Yes	Clothes Washer Replacement, and Microwave Ovens New or Replacement. May include non-electrically heated, low-income homes in BPA service territory.	No
	MM	Yes	For Tier 1, health and safety only. Allowed for Tier 2.	No
CFLs & Fixtures	DOE	Yes	Labor, hardware/CFL bulb replacement a low-cost measure, does not require cost justification/Fixtures & CFL torchiere lamps for energy efficiency allowable. No max limit on CFL bulbs.	Yes, if fixtures or CFL torchiere lamps
Policy 5.2	HHS	Yes	Same as DOE	Yes, if fixtures or CFL torchiere lamps
	BPA	Yes	Same as DOE May include non-electrically heated, low-income homes in BPA service territory.	Yes, if fixtures or CFL torchiere lamps
	MM	Yes	Same as DOE	Yes, if fixtures or CFL torchiere lamps

Fund Matrix				Page 2
Activities/ Measures	**Fund Source**	**Allowable Expense?**	**Specifics/Limitations/Allowances**	**Include cost in SIR?** (Individual measure & total package)
Consumer Conservation Education	DOE	Yes	Reimbursement limit: subject to average cost per unit (except LCNC)	No
			Allowable expenses: labor, materials, and program support (LCNC = materials only)	
			Budget categories to charge: Program Support (LCNC = Program Support only)	
			See Low-Cost/No-Cost notes for DOE specific information	
	HHS	Yes	Reimbursement limit: up to 5% of grant.	No
			Allowable expenses: labor, materials, program support, LCNC	
			Budget categories to charge: Program Support	
	BPA	Yes	Reimbursement limit: up to 20% of grant	No
			Allowable expenses: labor, materials, program support, LCNC	
			Budget category to charge: Program Support	
			Visits can be done at non-electrically heated, low-income homes in BPA service territory.	
	MM	Yes	Reimbursement limit: up to 5% of grant.	No
			Allowable expenses: labor, materials, program support, LCNC	
			Budget category to charge: Program Support	
Closed Wall Cavity Insulation	DOE	Yes		Yes
	HHS	Yes		Yes
	BPA	Yes	Electric heat and BPA service territory only	Yes
Policy 5.1.9	MM	Yes		Yes
CO Detector Installation	DOE	Yes	Material and labor costs allowable as H&S expense	No
	HHS	Yes	Material and labor costs allowable as H&S expense	No
	BPA	Yes	Same as DOE. Electric heat and BPA service territory only	No
Policy 9.5	MM	Yes	Material and labor costs allowable as H&S expense	No
CO Testing	DOE	Yes	Testing devices and labor costs allowable as H&S expense	No
	HHS	Yes	Testing devices and labor costs allowable as H&S expense	No
Policy 9.4	BPA	Yes	Testing devices and labor costs allowable as H&S expense Electric heat and BPA service territory only	No
	MM	Yes	Testing devices and labor costs allowable as H&S expense	No
Fuel Switching	DOE	Yes	Commerce does not permit the general practice of fuel switching. Local agencies must notify Commerce. Switching fuels may occur, on a case-by case basis, under the following conditions only: SIR of 1 or greater and Health & Safety. See Section 5.1.7, Fuel Switching, for policy specifics.	Yes, unless H&S
	HHS	Yes		Yes, unless H&S
Policy 5.1.7	BPA	No		NA
	MM	Yes		Yes, unless H&S
Health & Safety Measures	DOE	Yes	Up to 14.7 % of program budget allowed.	No
	HHS	Yes	Up to 25 % of program budget allowed.	No
** Must be energy-related	BPA	Yes	Up to 30 % of program budget allowed. Electric heat and BPA service territory only.	No
Policy Chapter 9 Policy 5.3	MM	Yes	Up to $10,000 Total IMC limit for each unit, for Tier 1. Up to $25,000 for Tier 2. For rentals refer to Section 5.9.	No

Fund Matrix				Page 3
Activities/ Measures	**Fund Source**	**Allowable Expense?**	**Specifics/Limitations/Allowances**	**Include cost in SIR?** (Individual measure & total package)
Air Conditioning and Heating Systems Policy 5.1.2	DOE	Yes		Yes, unless H&S
	HHS	Yes		Yes, unless H&S
	BPA	Yes	Repair or replacement of electrical heaters or furnaces, if they are no longer working, or fail to heat the dwelling properly, is an authorized expenditure. The repair or replacement of electric heaters or furnaces in Eligible Dwelling Unit must be accompanied by additional cost-effective major weatherization measures to assure maximum energy efficiency of the electricity used by the repaired or replaced heaters or furnaces. Local Service Providers must use all available matching funds for these repairs when such funds are available.	Yes, unless H&S
			Electric heat and BPA service territory only.	
	MM	Yes		Yes, unless H&S
Home Energy Audits Policy 5.1	DOE	Yes		No
	HHS	Yes		No
	BPA	Yes	Electric heat and BPA service territory only	No
	MM	Yes		No
Lead-Safe Weatherization Policy 9.8	DOE	Yes	LSW costs are an allowed Health and Safety expense. Allowed costs include labor, material, equipment purchases used specifically for testing for lead, & related costs. If HUD funds used or work done in HUD housing, DOE funds may be used for clearance testing if no HUD funds are available.	No
	HHS	Yes	LSW costs are an allowed Health and Safety expense. Allowed costs include labor, material, equipment purchases used specifically for testing for lead & related costs.	No
	BPA	Yes	LSW costs are an allowed Health and Safety expense. Allowed costs include labor, material, equipment purchases used specifically for testing for lead, & related costs. Electric heat and BPA service territory.	No
	MM	Yes	LSW costs are an allowed Health and Safety expense. Allowed costs include labor, material, equipment purchases used specifically for testing for lead, & related costs.	No
Low-Cost/ No-Cost	DOE	Yes	Reimbursement limit: max of $50 per dwelling unit Allowable expenses: materials only Budget category to charge to: Program Support LCNC Wx measures are excluded from the "one DOE weatherization activity per dwelling unit restriction".	No
	HHS	Yes		No
	BPA	Yes		No
	MM	Yes		No
Mechanical Ventilation Policy 9.3	DOE	Yes		Yes, unless H&S
	HHS	Yes		Yes, unless H&S
	BPA	Yes	Electric heat and BPA service territory only	Yes, unless H&S
	MM	Yes		Yes, unless H&S

Fund Matrix				Page 4
Activities/ Measures	**Fund Source**	**Allowable Expense?**	**Specifics/Limitations/Allowances**	**Include cost in SIR?** (Individual measure & total package)
Refrigerator Replacement Policy 5.1.6	DOE	Yes	CFC recovery is required. Appliance disposal and CFC recovery costs are allowable.	Yes
	HHS	Yes	CFC recovery is required. Appliance disposal and CFC recovery costs are allowable.	Yes
	BPA	Yes	CFC recovery is required. Appliance disposal and CFC recovery costs are allowable. May be installed in non-electrically heated, low-income homes in BPA service territory.	Yes
	MM	Yes	Needs clarification of old language.	Yes, for Wx. No, for Repair: repairing or replacing non-functioning refrigerator.
Renewable Energy Systems Policy 5.7	DOE	Yes	Funds for renewable energy systems are not in addition to current average cost per unit. Maximum amount is the cumulative total average expenditure allowed for labor,	Yes
	HHS	TBD		
	BPA	TBD		
	MM	Yes	Funds for renewable energy systems are not in addition to current average cost per unit. Maximum amount is the cumulative total per unit -- Wx measures & renewable energy systems combined.	
Re-Weatherization Policy 1.6	DOE	Yes	Can re-weatherize if the dwelling unit was weatherized prior to 9/30/1994. Additional restrictions apply. *See Section 1.6, Ineligible Residences and Exceptions.*	Depends on measure
	HHS	Yes	Taking into account any previous energy conservation improvements, funds may be used to provide additional cost-effective weatherization regardless of when a home was previously weatherized or other fund sources used.	Depends on measure
	BPA	Yes	Taking into account any previous energy conservation improvements, funds may be used to provide additional cost-effective weatherization regardless of when a home was previously weatherized or other fund sources used. Electric heat and BPA service territory only.	Depends on measure
	MM	Yes	Taking into account any previous energy conservation improvements, funds may be used to provide additional cost-effective weatherization regardless of when a home was previously weatherized or other fund sources used.	Depends on measure
Smoke Detector Policy 9.5	DOE	Yes	Detector material and labor costs allowed as H&S	No
	HHS	Yes	Detector material and labor costs allowed as H&S	No
	BPA	Yes	Detector material and labor costs allowed as H&S Electric heat and BPA service territory only	No
	MM	Yes	Detector material and labor costs allowed as H&S	No
Solid Fuel Burning Appliance Systems Policy 5.1.3	DOE	Yes	Allowed as a H&S expense	No
	HHS	Yes	Allowed as a H&S expense	No
	BPA	No		
	MM	Yes	Allowed as a H&S expense	No

Fund Matrix

Page 5

Activities/ Measures	Fund Source	Allowable Expense?	Specifics/Limitations/Allowances	Include cost in SIR? (Individual measure & total package)
Space Heaters Policy 5.1.4	DOE	Yes	Smoke detectors material & labor costs allowable Securing mechanical building permits allowable Incidental repairs allowed on electric space heaters only (i.e. electric baseboard, wall, and radiant panel heaters)	Yes, unless H&S
	HHS	Yes	Same as DOE	Yes, unless H&S
	BPA	Yes	Same as DOE/Electric heat and BPA service territory only	Yes, unless H&S
	MM	Yes	Same as DOE	Yes, unless H&S
Water Heater Repair & Replacement Section 5.1.5	DOE	Yes		Yes, unless H&S
	HHS	Yes		Yes, unless H&S
	BPA	Yes	Electric heat and BPA service territory only	Yes, unless H&S
	MM	Yes		Yes, unless H&S
Weatherization-Related Repair Policy 5.4	DOE	Yes	Up to 15% of program budget allowed.	Yes
	HHS	Yes	Up to 15% of program budget allowed.	Yes - *Waived 10/1/2011 - 6/30/2015*
	BPA	Yes	Up to 30% of program budget allowed. Electric heat and BPA service territory only	Yes
	MM	Yes	Up to $10,000 Total IMC limit for each unit, for Tier 1. Up to $25,000 for Tier 2. For rentals refer to Policy 5.8.	No
Windows & Doors Policy 5.1.1	DOE	Yes	See Section 5.1.1, *Windows & Doors,* for repair and replacement justification.	Yes H&S is prohibited
	HHS	Yes	See Section 5.1.1 for repair & replacement justification	Yes, unless H&S
	BPA	Yes	See Section 5.1.1/Electric heat and BPA service territory only	Yes, unless H&S
	MM	Yes	See Section 5.1.1 for repair & replacement justification	Yes,unless exempt under Section 5.1.1

Definitions

ACPU:	Average Cost Per Unit
SIR:	Savings to Investment Ratio
WxM:	Weatherization Measures (Energy Conservation Measures)
H&S:	Health and Safety Measures
WRR:	Weatheriztion-Related Repair Measures (Incidental Repair Measures)
IMC:	Installed Measure Cost
Total IMC:	Total IMC = Wx Measures Costs + H&S Measures Costs + WRR Measures Costs
DOE:	Department of Energy funding
HHS:	Health and Human Services LIHEAP funding
BPA:	Bonneville Power Administration funding
MM:	Matchmaker Program funding (Wx or Repair)
TBD:	To be determined

Weatherization Program Fiscal Definitions

Request for Reimbursement Terms (Budget Line Items)	**Old Term**	**Definition**
ADMINISTRATION COSTS (Admin)		Costs associated with agency level functions, but not directly associated with a program. These agency level functions include, but are not limited to: planning, budgeting and accounting, and establishment and direction of local agency policies, goals, and objectives.
PROGRAM OPERATIONS COSTS (Category Total)		Costs that are clearly identifiable with a program. Includes the following costs: 1. Weatherization Measures, 2. Health and Safety Measures, 3. Weatherization-Related Repair Measures, 4. Program Support, 5. Vehicle and Equipment, and 6. Other Program Operations (Financial Audit, Liability Insurance, and Leveraging).
Weatherization (Wx) Measures Costs		The Installed Measure Costs for energy efficiency measures (building shell and equipment) determined to be cost-effective by DOE approved Commerce standards.
Health & Safety (H&S) Measures Costs		The Installed Measure Costs for energy-related measures and repairs necessary to eliminate hazards within a structure, which by their remedy, allow for the installation of weatherization materials. Energy-related health and safety measures and repairs are intended to protect building occupants.
Weatherization-Related Repair (WRR) Measures Costs		The Installed Measure Costs for repairs necessary for the effective performance or preservation of weatherization materials
Program Support Costs	Soft Shared Allocable Indirect	Costs directly associated with the Weatherization program, but not directly associated with a specific Weatherization building, including Audit and Inspection costs, Consumer Conservation Education costs, and the cost to carry out Low Cost/No Cost Weatherization activities.
Vehicle and Equipment		Costs for Vehicles and Equipment acquisition in compliance with Policy 6.6 Equipment (purchases exceeding $5000).
Other Program Operations Costs (Program Operations costs NOT included in building costs)		Cumulative Costs can include: **Financial Audit Costs:** A financial audit in compliance with Policy 6.8 Audits. **Liability Insurance Costs:** Costs for insurance policies to cover local agencies for regular liability with General Liability Insurance and specific health and safety issues with Pollution Occurrence Insurance (POI). **Leveraging Costs:** Funds used for leveraging activities in accordance with 10 CFR 440.14(b) (9) (xiv), such as utility funds.
TRAINING AND TECHNICAL ASSISTANCE (T&TA) COSTS		Costs for Training and Technical Assistance in compliance with Policy 6.5 Training and Technical Assistance.
SPECIAL PROJECT COSTS		Costs for special projects as defined in individual local agencies' grant agreements.

Weatherization Program Fiscal Definitions (continued)

Weatherization Fiscal Term The following terms are used within the "Budget Line Item" definitions on Page 1 of 2	**Old Term**	**Definition**
Installed Measure Costs	Hard, Direct	1. Contractor: Verifiable contractor costs (including material and labor costs) to install Wx Measures, H&S Measures, or WRR Measures (total contractor bill). 2. Crew: Verifiable material and labor costs to install Wx Measures, H&S Measures, or WRR Measures.
Material Costs	Hard, Direct	The cost of purchase and delivery of weatherization materials.
Labor Costs	Hard, Direct	The cost of construction to install weatherization materials including wage, fringe, and tax.
Consumer Conservation Education (Consumer Con Ed) Costs		Costs included in Program Support to provide consumer con ed to clients including, but not limited to, energy efficiency, safety hazards, and the proper operation of equipment, including the operation, testing, and battery replacement of smoke detectors.
Low Cost/No Cost Costs		Costs included in Program Support to carry out low cost/no cost weatherization activities providing relatively inexpensive conservation devices that can be easily installed by the Wx client, (i.e., compact fluorescent bulbs, low-flow shower heads and aerators and door weather-stripping).
Building Costs	Job Cost Unit Cost Project Cost	All costs associated to a specific building, including Wx and WRR Installed Measure Costs and Program Support Costs. To determine cost per unit, divide by the number of units per building. The following costs are NOT included in Building Cost: Administration, Health and Safety Measures Costs, Other Program Operations Costs (Financial Audits, Liability Insurance, and Leveraging Costs), Training and Technical Assistance Costs, and Special Project Costs. Monthly and Quarterly calculated Program Support costs will be temporary only. The final total building cost will be determined at contract closeout.

Training and Technical Assistance Expense Form

Training Received	Dates Attended
1. _____	_____
2. _____	_____
3. _____	_____
4. _____	_____
5. _____	_____

Total Cost

$ _____

Name and Title of Individual(s) Attending:

Name	Title	Training Attended
_____	_____	_____
_____	_____	_____
_____	_____	_____
_____	_____	_____
_____	_____	_____

Peer Exchange Proposal Form

Name of Agency: _____ Date: _____

Contact: _____ Phone: _____

Email: _____

Describe training need: _____

Who will provide the training? _____

Where will the training be provided? _____

Describe why this person was selected: _____

When would you like the training? _____

Who will receive the training? (Provide names and titles)

_____ _____

_____ _____

_____ _____

Are the people listed above assigned only to the weatherization program? ☐ Yes ☐ No

If no, how much will be contributed by other programs? $ _____

Who will travel? (Check one) ☐ Trainer ☐ Trainee

What is the cost?

	Trainer	**Trainee**
Salary:	_____	_____
Fringe:	_____	_____

				Trainer	**Trainee**
Travel:	_____	_____			
Lodging:	_____	_____	# of Nights?	_____	_____
Per Diem:	_____	_____			
Other:	_____	_____	Describe:_____		
Total:	_____	_____			

Documentation

Is a written, signed agreement attached? ☐ Yes ☐ No

If not, when will it be available?_____

Commerce ONLY

Training Coordinator:

Will the proposal meet a local agency need?	☐ Yes	☐ No
Is the letter of agreement complete?	☐ Yes	☐ No
Is cost share required?	☐ Yes	☐ No
Recommendation	☐ Yes	☐ No

_____

Signature Date

Approval by HIP Unit Manager: ☐ Yes ☐ No

_____

Signature Date

Equipment/Vehicle Purchase Request/Approval Form

USE A SEPARATE FORM FOR EACH CONTRACT

Contract: _____Commerce Representative: _____
(If request is for a vehicle, allow 90 days for DOE approval)

Local Agency: _____

Address: _____

_____

Contact Person: _____ Phone Number: _____

Email: _____

Equipment/Vehicle Requested

Provide 3 quotes/bids from different vendors for this purchase (include shipping & taxes):

Description (List each item)	Quantity (Number)	Max Price $ each (Include sales tax)	Budget Category	Total Cost

If equipment/vehicle, will it be used full-time or part-time? _____

Reason & Purpose for purchase (Attach additional sheets if necessary):

_____

Will other programs use capital asset/equipment/vehicle? ☐ Yes ☐ No

If yes, shared purchase, use, maintenance, or rental fee? List other programs and percent of time used. *(A rental fee or proportionate time use is required if a program does not share in the purchase.)*

_____

_____

Briefly describe how procurement will be done and confirm that all Agency, State, and Federal procurement guidelines will be met. *(WPN 09-1B, 3/12/09).*

_____

_____

Is this a request for a replacement, or an expansion for ramp-up? *(WPN 09-1B, 3/12/09).*

_____

_____

Provide statement that lowest bid will be selected or sufficient justification of "best value selection" if low bid not recommended for awarding agency approval: *(WPN 09-1B, 3/12/09)*

_____

_____

Was a lease alternative explored? ☐ Yes ☐ No
If yes provide: Terms, Condition, & Purchase Option: *(WPN 09-1B, 3/12/09)*

List all funding sources used for this purchase: _____

_____

Local agency certifies that procurement records will be on file and available for review. Local agency further certifies that this purchase will be in accordance will all applicable rules, procedures, and guidelines per contract referenced above.

**** Authorized person must sign request****

Local Agency

_____ _____
Authorized Signature Date

_____
Title

Commerce Approvals *(DOE approval attached for vehicles/DOE contract)*

_____ _____
Commerce Representative Date

_____ _____
Managing Director Date

Equipment Reserve Fund Application

Agency: _____

Address: _____

_____

Contact Person: _____

Phone Number: _____ Email: _____

Equipment Requested

Equipment Description: Justification – Use criteria in Policies, Section 6.6. Criteria include need, condition of equipment, availability of other funds, and existence of recent similar purchases.	Quantity	Estimated Price ($ each, include sales tax)	Total Funds Requested Per Item
1. *Justification:*			
2. *Justification:*			
3. *Justification:*			
		Total funds requested:	

Attach additional sheets for further items or explanation if necessary.

Will non-weatherization programs use this equipment? ☐ Yes ☐ No

If yes, indicate shared purchase, use, maintenance, or rental fee. List other programs and percent of time used. *Note: A rental fee for proportionate time use is required if a program does not share in the purchase.*

Submit this form to your agency's field representative.

Measuring Wx Fiscal Performance

Grant Expenditure Benchmarks

Fund Source	Term	Length	Grant Expenditure Benchmarks		
			30% - 50%	60% - 75%	100%
LIHEAP	Jan 1 - Dec 31	1 yr	Jun 30	Sep 30	Dec 31
DOE	Jul 1 - Jun 30	1 yr	Dec 31	Mar 31	Jun 30
BPA	Oct 1 - Sep 30	1 yr	Mar 31	Jun 30	Sep 30

Fund Source	Term	Length	Grant Expenditure Benchmarks		
			25% - 40%	60% - 75%	100%
MM	Jul 1 - Jun 30	2 yrs	Dec 31 (yr1)	Dec 31 (yr2)	Jun 30 (yr2)

Community, Trade, and Economic Development
Office of Community Development
Housing Division

SAMPLE Weatherization
Contract Face Sheet

Contractor Name and Address:

Community Action Agency
123 Main Street
Olympia, WA 98502

Contract No: 123

Contract Period:
April 1 - March 31

Funding Authority:

U.S. Department of Energy (Federal Catalog No. 81.042)

Contract Amount: $53,963

Purpose: To provide funding for low-income weatherization services

Requests for Reimbursement are Subject to the Following Budget:

Administration	$6,703
Program Operation	$31,273
T&TA Passthru	$1,769
Liability Insurance	$2,885
Audit	$1,000
Health & Safety	$6,753
Wx-Related Repairs	$3,580
Project #1	$0

Service Area By County:

THE RIGHTS AND OBLIGATIONS OF BOTH PARTIES ARE GOVERNED BY THE DOCUMENTS LISTED IN WHICH ARE INCORPORATED HEREIN AS THOUGH SET FORTH IN FULL.

APPROVAL: THE LOCAL AGENCY AND THE DEPARTMENT OF COMMUNITY, TRADE AND ECONOMIC DEVELOPMENT ACKNOWLEDGE AND ACCEPT THE TERMS OF THIS CONTRACT. SIGNATURE FOR BOTH PARTIES ARE REQUIRED BELOW. IN ADDITION, THE LOCAL AGENCY CERTIFIES THAT THE DOCUMENTS LISTED IN "EXHIBIT A" ARE ON FILE WITH THE LOCAL AGENCY AND HAVE BEEN REVIEWED.

For the Department

Stephen H. Buxbaum, Assistant Director **Date**
Housing Services Division

For the Local Agency

Signature **Date**

Title

Approved as to form by Colleen B. Evans, A.A.G. 26-June-98

EXAMPLE EXHIBIT A

APPLICABLE TERMS AND CONDITIONS
Low-Income Home Energy Assistance Program (LIHEAP)
Weatherization Program

The Contractor shall comply with the terms and conditions contained within the following documents provided to the Contractor by the Department of Commerce:

- General Terms and Conditions, September 1, 2006 issued by Commerce for all of its weatherization programs, as applicable.
- Special Terms and Conditions, issued by Commerce for each of its weatherization programs, as applicable.
- Washington State Low-Income Weatherization Assistance Plan for the current year, as applicable.
- Washington State Policies and Procedures for Managing the Low-Income Weatherization Program, 2006, as amended, as applicable.
- Washington State Specifications for the Low-Income Weatherization Program, 2006, as amended, as applicable.
- Commerce Policy Memoranda, as applicable.

State of Washington Department of Community, Trade and Economic Development Office of Community Development Housing Division

SAMPLE Weatherization Contract Amendment Face Sheet

Contractor Name and Address:

Community Action Agency
123 Main Street
Olympia, WA 98502

Contract No: 123
Amendment Code: A

Contract Period:
April 1 - March 31

Funding Authority:

U.S. Department of Energy (Federal Catalog No. 81.042)

Contract Amount: $59,663

Change:	Old Amount:
$5,700	$53,963

Purpose: To increase contract amount, adding T&TA funding for Energy OutWest and Weatherization Workgroup.

Requests for Reimbursement are Subject to the Following Budget:

Administration	$6,703
Program Operation	$31,273
T&TA Passthru	$7,469
Liability Insurance	$2,885
Audit	$1,000
Health & Safety	$6,753
Wx-Related Repairs	$3,580
Project #1	$0

Service Area By County:

THIS FACE SHEET AMENDS THE PRIOR FACE SHEET. THIS AMENDMENT SHALL BE READ IN CONJUNCTION WITH THE ORIGINAL CONTRACT AND ANY PRIOR AMENDMENTS. ALL OTHER TERMS REMAIN IN EFFECT EXCEPT AS AMENDED.

APPROVAL: THE LOCAL AGENCY AND THE DEPARTMENT OF COMMUNITY, TRADE AND ECONOMIC DEVELOPMENT ACKNOWLEDGE AND ACCEPT THE TERMS OF THIS CONTRACT. SIGNATURE FOR BOTH PARTIES ARE REQUIRED BELOW. IN ADDITION, THE LOCAL AGENCY CERTIFIES THAT THE DOCUMENTS LISTED IN "EXHIBIT A" ARE ON FILE WITH THE LOCAL AGENCY AND HAVE BEEN REVIEWED.

For the Department

Stephen H. Buxbaum, Assistant Director **Date**
Housing Services Division

For the Local Agency

Signature **Date**

Title

Approved as to form by Colleen B. Evans, A.A.G. 26-June-98

SIGNATURE AUTHORITY

This form must be completed electronically and a hard copy with original signatures must be submitted to Commerce.

Please provide signature, typed name, and title for each of the following. Use blocks A and B to authorize signatures other than those provided in block C, who are authorized to sign all documents, unless indicated otherwise. Use additional sheets if needed.

A. AUTHORIZED TO SIGN CONTRACTS/CONTRACT MODIFICATIONS	All*	HHS	DOE	BPA	EM	HOME HRRP
1)	☐	☐	☐	☐	☐	☐
Signature Name (typed)						
2)	☐	☐	☐	☐	☐	☐
Signature Name (typed)						
B. AUTHORIZED TO SIGN VOUCHERS						
1)	☒	☐	☐	☐	☐	☐
Signature Name (typed)						
2)	☐	☐	☐	☐	☐	☐
Signature Name (typed)						

***Refers to all programs.**

C. AUTHORIZING AUTHORITIES

Signature	**Name (typed)**	**Signature**	**Name (typed)**
Title	**Date**	**Title**	**Date**

STATE OF WASHINGTON
Department of Commerce

Commerce Weatherization Program Certification Regarding Debarment, Suspension, or Ineligibility and Voluntary Exclusion – Primary Tier Covered Transactions

FORM 1
Page 1

Certification Regarding Debarment, Suspension, or Ineligibility and Voluntary Exclusion – Primary Tier Covered Transactions

Period: Year 0000 (January 1 to December 31)

The terms covered transaction, debarred, suspended, ineligible, lower tier covered transaction, person, primary covered transaction, principal, and voluntarily excluded, as used in this section, have the meanings set out in the Definitions and Coverage sections of the rules implementing Executive Order 12549. You may contact the Department of Commerce for assistance in obtaining a copy of these regulations.

The Contractor certifies by signing this form that to the best of its knowledge and belief that its principals:

Are not presently debarred, suspended, proposed for debarment, and declared ineligible or voluntarily excluded from covered transactions by any Federal department or agency.

Have not within a three-year period preceding this contract, been convicted of or had a civil judgment rendered against them for commission of fraud or a criminal offense in connection with obtaining, attempting to obtain, or performing a public (Federal, State, or local) transaction or contract under a public transaction; violation of Federal or State antitrust statutes or commission of embezzlement, theft, forgery, bribery, falsification, or destruction of records, making false statements, or receiving stolen property.

Are not presently indicted for or otherwise criminally or civilly charged by a governmental entity (Federal, State, or local) with commission of any of the offenses enumerated above in this section; and

Have not within a three-year period preceding the signing of this contract had one or more public transactions (Federal, State, or local) terminated for cause of default.

Where the Contractor is unable to certify to any of the statements in this contract, the Contractor shall attach an explanation to this contract.

STATE OF WASHINGTON
Department of Commerce

Commerce Weatherization Program Certification Regarding Debarment, Suspension, or Ineligibility and Voluntary Exclusion – Primary Tier Covered Transactions

FORM 1
Page 2

The Contractor agrees by signing this contract that it shall not knowingly enter into any lower tier covered transaction with a person who is debarred, suspended, declared ineligible, or voluntarily excluded from participation in this covered transaction, unless authorized by the Commerce.

The Contractor further agrees by signing this contract that it will include the clause titled "Certification Regarding Debarment, Suspension, Ineligibility and Voluntary Exclusion-Lower Tier Covered Transaction," as follows, without modification, in all lower tier covered transactions and in all solicitations for lower tier covered transactions.

"Certification Regarding Debarment, Suspension, Ineligibility and Voluntary Exclusion-Lower Tier Covered Transactions

a. The lower tier contractor certifies, by signing this contract that neither it nor its principals is presently debarred, suspended, proposed for debarment, declared ineligible, or voluntarily excluded from participation in this transaction by any Federal department or agency.

b. Where the lower tier contractor is unable to certify to any of the statements in this contract, such contractor shall attach an explanation to this contract."

NAME OF AGENCY COVERED BY THIS CERTIFICATION:

(STREET ADDRESS, CITY, STATE, ZIP CODE)

CERTIFYING OFFICIAL

TYPED NAME AND TITLE:

SIGNATURE (ORIGINAL):_____

DATE:

Property Owner Release Form

I, _____ certify that I am the owner of the property located at:
(Property Owner)

_____

I authorize _____ to make the following repairs and
(Weatherization Agency)

improvements with the understanding that no charges will be made for labor or materials.

_____ _____

_____ _____

_____ _____

_____ _____

I hereby release and pledge to hold harmless the above named agency and its staff from any liability in connection with the work listed above or any act or eventuality arising from this work.

Property Owner Signature: _____

Date: _____

Address: _____ Phone:_____

_____

Approved by: _____ Date:_____
(Signature of Agency Representative)

This form must be submitted annually with original signature.

Department of Commerce
Housing Division
Housing Improvements and Preservation Programs

Certification Regarding

Federal Certification Regarding Lobbying

Period: Year 0000 (January 1 to December 31)

The undersigned certifies, to the best of his or her knowledge and belief, that:

1. No federal appropriated funds have been paid or will be paid, by or on behalf of the undersigned, to any person for influencing or attempting to influence an officer or employee of any agency, a Member of Congress, an officer or employee of Congress, or an employee of a Member of Congress in connection with the awarding of any federal contract, the making of any federal grant, the making of any federal loan, the entering into of any cooperative agreement, and the extension, continuation, renewal, amendment, or modification of any federal contract, grant, loan, or cooperative agreement.
2. If any funds other than federal appropriated funds have been paid or will be paid to any person for influencing or attempting to influence an officer or employee of any agency, a Member of Congress, an officer or employee of Congress, or an employee of a Member of Congress in connection with this federal contract, grant, loan, or cooperative agreement, the undersigned shall complete and submit Standard Form-LLL, "Disclosure Form to Report Lobbying," in accordance with its instructions.
3. The undersigned shall require that the language of this certification be included in the award documents for all sub-awards at all tiers (including subcontracts, sub-grants, and contracts under grants, loans, and cooperative agreements) and that all sub-recipients shall certify and disclose accordingly.

This certification is a material representation of fact upon which reliance was or will be placed when this transaction was/is made or entered into. Submission of this certification is a prerequisite for making or entering into this transaction imposed by Section 1352, Title 31, U. S. Code. Any person who fails to file the required certification shall be subject to a civil penalty of not less than $10,000 and not more than $100,000 for each such failure.

_____
Name and Title of Authorized Representative

_____ _____
Signature Date

_____
Name of Organization

_____
Address of Organization

Washington State Department of Commerce
HOUSING DIVISION

SAMPLE WEATHERIZATION PROGRAM
REQUEST FOR REIMBURSEMENT

Working Capital Advance Example ONE

Contractor Name and Address

Weatherization Guys and Gals
PO Box 999
Anywhere, WA

Contract Number 04-431-XXX
Report Period Whenever
Report No. _____ **Final? (Yes/No)** _____

EXPENDITURE DETAIL

Total Expenditures Previously Reported: $ 10,000.00

Expended This Period:

Administration	$	1,000.00
Program Operation	$	7,000.00
Health & Safety	$	-
Wx-Related Repairs	$	-
T & TA	$	-
Total This Period:	**$**	**8,000.00**

RECEIPTS - EXPENDITURE RECONCILIATION

Receipts:

Advance	$	10,000.00
Materials Inventory	$	-
Warrants Received	$	10,000.00
Total Receipts	**$**	**20,000.00**
Less Cumulative Expenditures To-Date:	$	18,000.00
Cash on Hand at End of Reporting Period:	$	2,000.00

WEATHERIZED UNITS REPORT

Completed This Period	3
Total Completed to Date	6
In-Progress Units:	5

Total Cumulative Expenditures To-Date **$ 18,000.00**

Advance Request **$ 10,000.00**

CERTIFICATION: I certify that the information on this form is a true and accurate report of the cash status and that all reported expenditures are properly chargeable to the above referenced grant.

Title: _____ **Date:** _____

Allowable Costs : **$8,000.00**

Reimbursement : **8000**

Advance : **$8,000.00**

Apply to Advance : **<8000>**

FED TAX ID #	PROGRAM APPROVAL	DATE

DOC INPUT DATE	CURRENT DOC. NO.	REFERENCE DOC NO.	VENDOR NUMBER	SUFFIX

ACCOUNT NO.	ASD NUMBER	VENDOR MESSAGE

TRANS CODE	MOD	MASTER INDEX	FUND	APPN INDEX	PROGRAM INDEX	SUB OBJ	SUB SUB OBJ	PROJECT	SUB PROJ	GL ACCT	SUBSID ACCOUNT	AMOUNT	INVOICE NUMBER
			001	020	43104							$8,000	
												($8,000)	
												$8,000	

SIGNATURE OF ACCOUNTING PREPARER FOR PAYMENT	DATE	WARRANT TOTAL	INVOICE DATE
ACCOUNTING APPROVAL FOR PAYMENT	DATE	$8,000	

Washington State Department of Commerce
HOUSING DIVISION

SAMPLE WEATHERIZATION PROGRAM
REQUEST FOR REIMBURSEMENT

Working Capital Advance Example TWO

Contractor Name and Address

Weatherization Guys and Gals
PO Box 999
Anywhere, WA

Contract Number 04-431-XXX
Report Period Whenever
Report No. _____ **Final? (Yes/No)** _____

EXPENDITURE DETAIL

Total Expenditures Previously Reported: $ 10,000.00

Expended This Period:

Administration	$	2,000.00
Program Operation	$	5,000.00
Health & Safety	$	2,500.00
Wx-Related Repairs	$	2,500.00
T & TA	$	-
Total This Period:	**$**	**12,000.00**

RECEIPTS - EXPENDITURE RECONCILIATION

Receipts:

Advance	$	10,000.00
Materials Inventory	$	-
Warrants Received	$	10,000.00
Total Receipts	**$**	**20,000.00**
Less Cumulative Expenditures To-Date:	$	22,000.00
Cash on Hand at End of Reporting Period:	$	(2,000.00)

WEATHERIZED UNITS REPORT

Completed This Period:	3
Total Completed to Date	6
In-Progress Units:	5

Total Cumulative Expenditures To-Date **$ 22,000.00**

Advance Request **$ 10,000.00**

CERTIFICATION: I certify that the information on this form is a true and accurate report of the cash status and that all reported expenditures are properly chargeable to the above referenced grant.

Title: _____ **Date:** _____

Allowable Costs : **$12,000.00**

Reimbursement : **$12,000**

Advance : **$10,000.00**

Apply to Advance : **($10,000)**

FED TAX ID #	PROGRAM APPROVAL	DATE

DOC INPUT DATE	CURRENT DOC. NO.	REFERENCE DOC NO.	VENDOR NUMBER	SUFFIX

ACCOUNT NO.	ASD NUMBER	VENDOR MESSAGE

TRANS CODE	MOD	MASTER INDEX	FUND	APPN INDEX	PROGRAM INDEX	SUB OBJ	SUB SUB OBJ	PROJECT	SUB PROJ	GL ACCT	SUBSID ACCOUNT	AMOUNT	INVOICE NUMBER
			001	020	43104							$12,000	
												($10,000)	
												$10,000	

SIGNATURE OF ACCOUNTING PREPARER FOR PAYMENT	DATE	WARRANT TOTAL	INVOICE DATE
ACCOUNTING APPROVAL FOR PAYMENT	DATE	$12,000	

Washington State Department of Commerce,

Housing Department

SAMPLE WEATHERIZATION PROGRAM REQUEST FOR REIMBURSEMENT

Working Capital Advance Example THREE

Contractor Name and Address

Weatherization Guys and Gals
PO Box 999
Anywhere, WA

Contract Number 04-431-XXX

Report Period Whenever

Report No. _____ **Final? (Yes/No)** _____

EXPENDITURE DETAIL

Total Expenditures Previously Reported: $ 10,000.00

Expended This Period:

Administration	$	1,000.00
Program Operation	$	3,000.00
Health & Safety	$	3,000.00
Wx-Related Repairs	$	3,000.00
T & TA	$	-
Total This Period:	**$**	**10,000.00**

RECEIPTS - EXPENDITURE RECONCILIATION

Receipts:

Advance	$	10,000.00
Materials Inventory	$	-
Warrants Received	$	10,000.00
Total Receipts	**$**	**20,000.00**
Less Cumulative Expenditures To-Date:	$	20,000.00
Cash on Hand at End of Reporting Period:	$	-

WEATHERIZED UNITS REPORT

Completed This Period	3
Total Completed to Date	6
In-Progress Units:	5

Total Cumulative Expenditures To-Date **$ 20,000.00**

Advance Request $ 5,000.00

CERTIFICATION: I certify that the information on this form is a true and accurate report of the cash status and that all reported expenditures are properly chargeable to the above referenced grant.

Title: _____ **Date:** _____

Allowable Costs : **$10,000.00**

Reimbursement : **$5,000**

Advance : **$5,000.00**

Apply to Advance : **($10,000)**

FED TAX ID #	PROGRAM APPROVAL	DATE

DOC INPUT DATE	CURRENT DOC. NO.	REFERENCE DOC NO.	VENDOR NUMBER	SUFFIX

ACCOUNT NO.	ASD NUMBER	VENDOR MESSAGE

TRANS CODE	MOD	MASTER INDEX	FUND	APPN INDEX	PROGRAM INDEX	SUB OBJ	SUB SUB OBJ	PROJECT	SUB PROJ	GL ACCT	SUBSID ACCOUNT	AMOUNT	INVOICE NUMBER
			001	020	43104							$10,000	
												($10,000)	
												$5,000	

SIGNATURE OF ACCOUNTING PREPARER FOR PAYMENT	DATE	WARRANT TOTAL	INVOICE DATE
ACCOUNTING APPROVAL FOR PAYMENT	DATE	$5,000	

Washington State Department of Commerce
HOUSING DIVISION

SAMPLE WEATHERIZATION PROGRAM
REQUEST FOR REIMBURSEMENT

Working Capital Advance Example FOUR

Contractor Name and Address

Weatherization Guys and Gals
PO Box 999
Anywhere, WA

Contract Number 04-431-XXX
Report Period Whenever
Report No. _____ **Final? (Yes/No)** _____

EXPENDITURE DETAIL

Total Expenditures Previously Reported: $ 2,000.00

Expended This Period:

Administration	$	200.00
Program Operation	$	1,300.00
Health & Safety	$	-
Wx-Related Repairs	$	500.00
T & TA	$	-
Total This Period:	**$**	**2,000.00**

RECEIPTS - EXPENDITURE RECONCILIATION

Receipts:

Advance	$	10,000.00
Materials Inventory	$	-
Warrants Received	$	2,000.00
Total Receipts	**$**	**12,000.00**
Less Cumulative Expenditures To-Date:	$	4,000.00
Cash on Hand at End of Reporting Period:	$	8,000.00

WEATHERIZED UNITS REPORT

Completed This Period:	1
Total Completed to Date	1
In-Progress Units:	1

Total Cumulative Expenditures To-Date **$ 4,000.00**

Advance Request **$ 2,000.00**

CERTIFICATION: I certify that the information on this form is a true and accurate report of the cash status and that all reported expenditures are properly chargeable to the above referenced grant.

Title: _____ **Date:** _____

Allowable Costs : $2,000.00
Advance : $0.00
Reimbursement : $0
Apply to Advance : ($2,000)

FED TAX ID #	PROGRAM APPROVAL	DATE

DOC INPUT DATE	CURRENT DOC. NO.	REFERENCE DOC NO.	VENDOR NUMBER	SUFFIX

ACCOUNT NO.	ASD NUMBER	VENDOR MESSAGE

TRANS CODE	MOD	MASTER INDEX	FUND	APPN INDEX	PROGRAM INDEX	SUB OBJ	SUB SUB OBJ	PROJECT	SUB PROJ	GL ACCT	SUBSID ACCOUNT	AMOUNT	INVOICE NUMBER
			001	020	43104							$2,000	
												($2,000)	
												$0.00	

SIGNATURE OF ACCOUNTING PREPARER FOR PAYMENT	DATE	WARRANT TOTAL	INVOICE DATE
ACCOUNTING APPROVAL FOR PAYMENT	DATE	$0.00	

WASHINGTON STATE
DEPARTMENT OF COMMERCE

2011 SAMPLE WEATHERIZATION PROGRAM
REQUEST FOR REIMBURSEMENT

Form 19-1A

VOUCHER DISTRIBUTION

AGENCY NUMBER: 1030

Commerce Contract Number: 10-43101-

AGENCY NAME
DEPARTMENT OF COMMERCE
PO BOX 48300
OLYMPIA, WA 98504-8300

VENDOR OR CLAIMANT (Warrant is to be payable to:)

INSTRUCTION TO VENDOR OR CLAIMANT:
Show complete detail for each item.

Vendor's Certificate: I hereby certify under perjury that the items and totals listed herein are proper charges for materials, merchandise or services furnished to the State of Washington, and that all goods furnished and/or services rendered have been provided without discrimination because of age, sex, marital status, race, creed, color, national origin, handicap, religion or Vietnam era or disabled veterans status. The individual signing this voucher certifies that I have the authority to sign this voucher.

Contact Person:	
Phone:	
Email:	
Contract Period:	
REPORT PERIOD:	Oct-10

By:
(SIGN IN BLUE INK)
(TITLE) (DATE)

EXPENDITURE DETAIL

			BUDGET	Request To Date	BUDGET BALANCE
Total Expenditures Previously Reported:	$ -				
Expended This Period:					
ADMINISTRATION	$ -	Administration	$0.00	$0.00	$0.00
PROGRAM OPERATIONS					
Weatherization Measures	$ -	Wx Measures	$0.00	$0.00	$0.00
Health and Safety Measures	$ -	H&S Measures	$0.00	$0.00	$0.00
Wx-Related Repairs Measures	$ -	WRR Measures	$0.00	$0.00	$0.00
Program Support	$ -	Program Support	$0.00	$0.00	$0.00
Vehicle and Equipment	$ -	Vehicle and Equipment	$0.00	$0.00	$0.00
Other PO	$ -	Other PO	$0.00	$0.00	$0.00
TRAINING & TECHNICAL ASSISTANCE	$ -	T & TA	$0.00	$0.00	$0.00
SPECIAL PROJECT COSTS	$ -	Special Project Cost	$0.00	$0.00	$0.00
Total This Period:	$ -	TOTAL	$0.00	$0.00	$0.00
				ADVANCE	$ -
Total Cumulative Expenditures To-Date	$ -	Advance Request	$ -		

FOR COMMERCE USE ONLY

Allowable Costs : $0.00
Advance : $0.00
Reporting Period
Invoice Request: $
Apply to Advance : $

Match: Year / Dollars / Coding

PROGRAM APPROVAL | DATE

DOC DATE | CURRENT DOC. NO. | REFERENCE DOC NO. | VENDOR NUMBER and SUFFIX

ACCOUNT NO. | AID NUMBER | VENDOR MESSAGE

TRANS CODE	MASTER INDEX	SUB OBJ	SUB SUB OBJ	GL ACCT	SUBMO	AMOUNT	INVOICE
	43200220					0.00	
	43200320					0.00	
	43200520					0.00	
	4320AA20					0.00	ADVANCE

SIGNATURE OF ACCOUNTING PREPARER FOR PAYMENT | DATE | WARRANT TOTAL | INVOICE DATE

ACCOUNTING APPROVAL FOR PAYMENT | DATE

Washington State Department of Commerce
COMMUNITY SERVICES HOUSING DIVISION
(Revised July 2012)

2011-2012 WEATHERIZATION PROGRAM
SAMPLE REQUEST FOR REIMBURSEMENT

INSTRUCTIONS

1. Provide list of all WIDS Agency Project Numbers or Commerce Project Numbers for buildings (projects) that have Installed Measure Costs on this month's Request for Reimbursement (19-1A). The intent of this list is to support the 19-1A.
2. Provide documentation (electronic or hard copy) to support the 19-1A amounts.

WIDS Number Table (including multi-family building number)

Project #		Project #		Project #	
Project #		Project #		Project #	
Project #		Project #		Project #

State of Washington
Dept. of Commerce
Housing Division

SAMPLE
Final Contract Closeout Report
Form 1, Budget & Actual Costs Statement

AGENCY NAME & ADDRESS

Contract #:
Contract Period:

BUDGET & ACTUAL COSTS STATEMENT

Final Spending Limit

Final Spending Limit must be entered and cannot exceed value of match accomplished by 6/30/05

LINE ITEM	FINAL BUDGET	ACTUAL COSTS*	BALANCE
Administration	$0.00	$0.00	$0.00
Program Operations	$0.00	$0.00	$0.00
T & TA	$0.00	$0.00	$0.00
Liability Insurance	$0.00	$0.00	$0.00
Financial Audit	$0.00	$0.00	$0.00
Health & Safety	$0.00	$0.00	$0.00
WX-Related Repair	$0.00	$0.00	$0.00
Other (Name):	$0.00	$0.00	$0.00
GRAND TOTALS	**$0.00**	**$0.00**	**$0.00**

**Total actual costs must not exceed the final spending limit*

FUND STATEMENT

FUNDS RECEIVED:	
Value of Weatherization Materials Transferred from Other Contracts (if any)	$0.00
Advance Funds Transferred from Prior Contract (if any)	$0.00
Warrants Received	$0.00
TOTAL FUNDS RECEIVED	**$0.00**

ACTUAL COSTS (from "Budget & Actual Costs Statement" above)	$0.00

AMOUNT DUE GRANTEE (if E minus D equals more than $0) or	$0.00
EXCESS FUNDS RECEIVED (if D minus E equals more than $0)	$0.00

Certification: I certify this statement reflects the contract budget, actual costs, budget balance, & fund status for contract # and that the final expenditure report has been submitted.

SIGNATURE DATE

TITLE

State of Washington
Dept. of Commerce
Housing Division

SAMPLE

Final Contract Closeout Report

Form 2, Grant Generated Program Income Report

Agency: - **Contract #** -

GRANT GENERATED PROGRAM INCOME REPORT

INCOME REPORT:

A. Balance Brought Forward from Previous Contract		$0.00
B. Amount Earned during the Contract Period		
Interest	$0.00	
Fees	$0.00	
Rent	$0.00	
Other (Specify)		
	$0.00	
	$0.00	
Total Earned Income During the Contract Period		$0.00
C. Total Grant Generated Program Income Available for the Contract Period		$0.00

EXPENDITURE REPORT:

D. Amount Expended on Grant Activities during the current Contract Period:*		
Administration	$0.00	
Materials	$0.00	
Program Support	$0.00	
Conservation Education	$0.00	
Wx-Related Repairs	$0.00	
Total Income Expended		$0.00

Balance to be carried over into the next contract: **$0.00**

*This amount must be documented costs OVER AND ABOVE those reported on the monthly Grant Expenditure Report and Request for Reimbursement reports.

SIGNATURE DATE

TITLE PHONE NUMBER

State of Washington
Dept. of Commerce
Housing Division

SAMPLE
Final Contract Closeout Report
Form 3, Inventory (Equipment)
Page 1 of 2

Agency: -

Contract # -

INSTRUCTIONS:

A physical inventory must be taken of all equipment with a useful life of more than one year and an acquisition cost of $5000 or more per unit, purchased under this contract or previous contracts.

EQUIPMENT INVENTORY

Funding Source:
Program: **Weatherization Assistance for Low-Income Persons**

FOR Commerce USE ONLY
Fund Code:

PURCHASE DATE	ITEM & DESCRIPTION	IDENTIFICATION NUMBER	CONDITION	QUANTITY	UNIT COST	TOTAL COST
						$ -
						$ -
						$ -
						$ -
						$ -
						$ -
						$ -
						$ -
						$ -
						$ -
						$ -
						$ -
						$ -
TOTAL COST OF ITEMS						$ -

TRANSFER OF INTEREST:

The Department's interest in property purchased under the 2005 contract or prior contracts is automatically transferred to the 2006 contract at the end of the contract period.

CERTIFICATION:

I certify that a physical inventory has been taken and the information provided is accurate and complete. I understand that the Department's interest in property purchased under this contract or prior contracts is automatically transferred to the agency's subsequent contract.

-

SIGNATURE **DATE** **AGENCY NAME**

TITLE **PHONE NUMBER** **Name of Person who Prepared this Report**

State of Washington	**SAMPLE**
Dept. of Commerce	**Final Contract Closeout Report**
Housing Division	**Form 3, Inventory (Equipment - Vehicle Record)**
	Page 2 of 2

Agency: - **Contract #** -

EQUIPMENT INVENTORY - VEHICLE RECORD

(Submit one form for each vehicle purchased with funds from this contract)

DESCRIPTION

Make and Body Style _____

Year and Model _____

Gross Weight/Empty Weight _____

IDENTIFICATION

Manufacturer's Serial No. _____

License Number _____

Tag Number _____

Title/Registration _____

ACQUISITION

Date of Purchase _____

Purchase Price _____

Mileage at Purchase Date _____

Current Mileage _____

LOCATION ASSIGNED

Garage _____
Other _____

SIGNATURE	**DATE**	**AGENCY NAME** -
TITLE	**PHONE NUMBER**	**Name of Person who Prepared this Report**

State of Washington
Dept. of Commerce
Housing Division

SAMPLE
Final Contract Closeout Report
Form 4, Final Expenditure Report & Request for Reimbursement

AGENCY NAME & ADDRESS

-
-
-

Contract #: -
Contract Period: -

FINAL EXPENDITURE REPORT and REQUEST FOR REIMBURSEMENT

LINE ITEM	FINAL BUDGET	EXPENDITURES PREV. REPORTED	EXPENDITURE ADJUSTMENTS	TOTAL EXPENDITURES
Administration	$ -	$ -	$ -	$ -
Program Operations	$ -	$ -	$ -	$ -
T & TA	$ -	$ -	$ -	$ -
Liability Insurance	$ -	$ -	$ -	$ -
Financial Audit	$ -	$ -	$ -	$ -
Health & Safety	$ -	$ -	$ -	$ -
Wx-Related Repairs	$ -	$ -	$ -	$ -
Other (Name):	$ -	$ -	$ -	$ -
GRAND TOTALS	$0.00	$0.00	$0.00	$0.00

Total Receipts for the Grant Period:
Less Total Expenditures for the Grant Period:
Balance on Hand at End of Grant Period: $0.00
Amount of Refund Enclosed to CLOSEOUT Grant
OR Final Reimbursement Requested to CLOSEOUT Grant

***TOTAL NUMBER OF UNITS WEATHERIZED DURING THE ENTIRE CONTRACT PERIOD:**

CERTIFICATION: I certify that the information on this form is a true and accurate report of the cash status and that all reported expenditures are properly chargeable to the above referenced grant.

BY: **Title:** **Date:**

Allowable Costs :
Advance : $

Commerce Approval :
Reimbursement : $
Apply to Advance : $

PREPARED BY	DATE	AGENCY APPROVAL	DATE

DOC DATE	CURRENT DOC NO	REF DOC NO	VENDOR NUMBER	VENDOR MESSAGE

TRANS CODE	MOD	FUND	APPN INDEX	MASTER INDEX	SUB OBJ	SUB SUB OBJ	CNTY	CITY	PROJ	AMOUNT	INVOICE NUMBER	GENERAL LEDGER
		001	020	4D5B0120	NB				4D5B			
		001	020	4D5P0120	NB				4D5P			
		001	020	4D5T0120	NB				4D5T			
		001	020	4D5P0120	NB				4D5P			1319

APPROVED FOR PAYMENT BY	DATE	WARRANT TOTAL

State of Washington	**SAMPLE**
Dept. of Commerce	**Final Contract Closeout Report**
Housing Division	**Form 5, Materials Inventory Transfer Voucher**

AGENCY NAME & ADDRESS

-

-

-

Contract #: -

MATERIALS INVENTORY TRANSFER VOUCHER

TRANSFER FROM: _____ Contract Number $ - Value

TRANSFER TO: _____ Contract Number $ - Value

CERTIFICATION:

I hereby certify under penalty of perjury that the items and totals listed herein are proper charges for materials purchased for the Low-Income Weatherization Program.

SIGNATURE TITLE DATE

Commerce Approval _____

SAMPLE Final Contract Closeout Report Form 6

State of Washington
Department of Commerce
Housing Division

OWNER REFUNDS RECEIVED AND EXPENDED

DOE allows contractors to receive and re-spend refunds from property owners whose units have been weatherized with funds awarded under prior year contracts. These funds are to be used first
to weatherize units in the current contract period. Units weatherized with refunds are to be included in the accounting for the current contract period, but reported in the close-out.

in the accounting for the current contract period, but reported in the close-out.

the total unit count for the contract period in which they are spent. The funds, however, are not to be

The total amount of refunds received during the 2005 contract period is:
$_____

SAMPLE WEATHERIZATION CONTRACT CLOSEOUT CHECKLIST

INSTRUCTIONS:

Prepare and submit one copy of each of the forms on the accompanying EXCEL sheets by the specified deadline.

	FORM NO.
BUDGET & ACTUAL COSTS STATEMENT	Sheet #1
GRANT GENERATED PROGRAM INCOME AND EXPENDITURE REPORT	Sheet #2
EQUIPMENT INVENTORY	Sheet #3
FINAL EXPENDITURE REPORT AND REQUEST FOR REIMBURSEMENT	Sheet #4
MATERIALS INVENTORY TRANSFER VOUCHER	Sheet #5
OWNER REFUNDS	Sheet #6

The forms submitted will be reviewed by Commerce. Please identify the name, position, and phone number of a contact person who will be available to answer any questions.

Name **Position** **Telephone**

CERTIFICATION: I certify that the information provided is accurate and complete and that there are no outstanding requests for reimbursement under the Weatherization Contract.

Signature **Typed Name and Position**

Date of Certification

Agency Name **Contract Number**

Equipment / Vehicle Disposition Form

(Transfer or Sale process may begin upon confirmation by Commerce)

For items with purchase value of $5,000 or more

Date: _____
Agency name: _____
Address: _____

Contact person: _____
Phone number: _____

Description of Equipment/Vehicle no longer needed by agency's weatherization program:

Year: _____ Make: _____Model _____
VIN #/Serial #:_____

Condition of Equipment/Vehicle: _____
_____
Contract : _____ Funding Source: _____

Reason Equipment/Vehicle is no longer needed, or wanted by agency: _____
_____
_____

Estimated Current Market Value of Equipment/Vehicle: $_____
How was the value determined? _____

Verification Required: Documentation (copy of e-mail) that this equipment or vehicle has been offered to all other Washington State funded Weatherization Programs in the Weatherization Network.

- If equipment/vehicle is requested and accepted (first come, first served basis), provide copy of this acceptance, with agency name, contact, and phone number.
- If equipment/vehicle was not requested by a member of the WX Network, please state so "_____."

Washington State Department of Commerce
Commerce Representative's name: _____
Title: _____
Phone: _____ ***E-mail:***_____

Agency may begin: Equipment Transfer Process____Equipment Sales Process____

ASHRAE 62.2 Ventilation, Pre-Weatherization Conditions *** Your input goes in the green squares*

IMPORTANT INFORMATION

Before entering any information in this sheet "save as" a new file. For best results always use a fresh template

This worksheet is only for calculating those projects for which all necessary inputs are reflected on the sheet. For all other projects refer directly to the ASHRAE 62.2-2013 standard.

This upper section of the worksheet is for recording data and existing fan conditions at the project start.

Complete all inputs in GREEN cells according to instructions.

				Technical Document Line Reference
Project Identifier		Pre-Weatherization blower door reading CFM50		1
Audit Date		People (not less than one)	1	2
Auditor Inspector		Bedrooms (not less than one)	1	15.0	3
		Conditioned Square Footage	0	0.0	4
		Initial Fan Flow Required (Q_{fan}) per ASHRAE calculation 4.1a		15.0	5

Room	Room Exists? (y/n)	Window cfm	Operable Window? (y/n)	Intermittent Required		Intermittent Measured Fan (cfm)	Continuous Required		Continuous Measured Kitchen = ach		Deficits (cfm)	
Kitchen		0		100	cfm		5	ach		ach	None	6
Bath 1		0		50	cfm		20	cfm		cfm	None	7
Bath 2		0		50	cfm		20	cfm		cfm	None	8
Bath 3		0		50	cfm		20	cfm		cfm	None	9
										Total Deficit	0.0	10
										Deficit /4	0.0	11

Needed Ventilation Estimate (prior to credits)			cfm	15.0	12
For most accurate estimate: Enter a blower door reading following air sealing and any other measures significantly affecting building tightness. If no other reading is entered, CFM50 from line 1 (above) will transfer here.	Blower Door CFM50: 0	N-Value from table (at left): 25.6	Actual Infiltration Estimate: 0.0	13
Assumed Infiltration = Square Footage x .02		0	0.0	14
Infiltration: Actual - Assumed			0.0	15
Infiltration Credit = (Actual - Assumed)/2			0.0	16
Sum of existing continuous bathroom ventilation from above (cfm)			0.0	17
Enter the total cfm of all additional continuous ventilation that is not shown on lines 7-9. Include any continuous kitchen ventilation in CFM				18
Estimated Continuous Ventilation to Add (needed-credit-existing continuous) This is only an estimate. Use lower section of worksheet to determine final project needs & record actual post weatherization airflow measurements used to satisfy ASHRAE requirements			15.0	19

N-Values for Infiltration Credit *(Saturn Resource Management)*

Washington	W	1	1.5	2	2.5	3
Olympia	0.77	25.6	22.6	20.8	19.4	18.4
Seattle	0.85	23.2	20.5	18.8	17.6	16.7
Spokane	0.85	23.2	20.5	18.8	17.6	16.7
Yakima	0.81	24.3	21.5	19.7	18.5	17.5
Portland	0.76	25.9	22.9	21.0	19.7	18.6

Pre Weatherization Notes:

ASHRAE 62.2 Ventilation Requirements - Post Weatherization (FINAL)

IMPORTANT INFORMATION

This worksheet is only for calculating those projects for which all necessary inputs are reflected on the sheet. For all other projects refer directly to the ASHRAE 62.2-2013 standard.

This lower section of the worksheet is for recording data and existing fan conditions at the project completion. Complete all inputs in GREEN cells according to instructions.

Note: Some input values may transfer from estimate sheet. You MUST verify all numbers in green cells are the final values for your project.

				Line Reference
Inspection Date		People (not less than one)	1	20
Auditor Inspector		Bedrooms (not less than one)	1	15.0	21
		Conditioned Square Footage	0	0.0	22
		Q_{fan} total per ASHRAE calculation 4.1a		15.0	23

Room	Room Exists? (y/n)	Window cfm	Operable Window? (y/n)	Intermittent Required		Intermittent Measured Fan (cfm)	Continuous Required		Continuous Measured Kitchen = ach		Deficits (cfm)	
Kitchen	0	0	0	100	cfm		5	ach		ach	None	24
Bath 1	0	0	0	50	cfm		20	cfm		cfm	None	25
Bath 2	0	0	0	50	cfm		20	cfm		cfm	None	26
Bath 3	0	0	0	50	cfm		20	cfm		cfm	None	27
										Total Deficit	0.0	28
										Deficit /4	0.0	29

Needed Ventilation (prior to credits)			cfm	15.0	30
This is the final blower door number for this project. A final measured CFM50 must be entered to calculate infiltration credit	Blower Door CFM50: 0	N-Value: 25.6	Actual Infiltration: 0.0	31
Assumed Infiltration = Square Footage x .02		0	0.0	32
Infiltration: Actual - Assumed			0.0	33
Infiltration Credit = (Actual - Assumed)/2			0.0	34
Sum of existing continuous bathroom ventilation from above (cfm)			0.0	35
Enter the total cfm of all additional continuous ventilation that is not shown on lines 25-27. Include any continuous kitchen ventilation in CFM				36
Continuous Ventilation Required To Add Per ASHRAE 62.2-2013 (needed-credit-existing continuous) Number must be equal to, or less than, zero (0) at final OR documentation of intermittent strategy for remaining amount must be added to project file. A negative number reflects amount of ventilation over 62.2 minimum requirements			15	37

Post Weatherization (Final) Project Notes:

ASHRAE 62.2 Intermittent fan flow calculator

Project Identifier	
Inspection Date	
Auditor Inspector	

Enter amount of continuous ventilation required 15 *** your input goes in the green box*

IF you choose to use a cycle time of one hour you may use this calculator, for other cycle times please refer to the table below.

Intermittent Fan #1
Measured Fan Flow cfm ***Minutes Per Hour required for this fan only*** 0

Set fan to this many minutes per hour for single intermittent fan strategy.
Note: If the value in this box is greater than 59 the additional amount must be dealt with by another fan

If you choose a strategy with two intermittent fans enter the minutes intermittent fan #1 is set for here min. ***Otherwise leave this blank***

Intermittent Fan #2
Measured Fan Flow cfm ***Minutes Per Hour required for this fan*** 0 ***Set second fan to this many minutes for double intermittent fan strategy***

		Cycle Time			
		Time between the start of fan "ON" cycles must not exceed the times below (in hours).			
		0-4	***8***	***12***	***24***
Run Time	***6***	150	190	not allowed	not allowed
	12	75	89	134	not allowed
Fan must be set to run for at least this many minutes of each hour in desired cycle	***18***	50	56	70	not allowed
	24	38	41	46	188
	30	30	32	34	58
	36	25	26	27	34
	42	21	22	22	25
	48	19	19	19	20
	54	17	17	17	17
	60	15	15	15	15

Example: If your cycle time is fan on once every hour; use the 0-4 column. If it is once every three hours use the 0-4 column. You must move to the 8 hour column if you exceed 4 hours..and up to 12 if you exceed 8 etc.

Example: If your cycle time is fan on once per hour the run time is as shown. If your cycle time is two hours multiply the times shown by two and that is the number of minutes required.

Fan Flow must measure at least the amount shown at the intersection of the appropriate run time per hour and cycle time shown above (in CFM)

Example: If your cycle time is fan on once every 12 hours AND your run time is only 6 minutes per hour, you see this is not allowed. If your cycle time is between 0 and 4 hours AND your run time is 30 minutes per hour, your fan flow must equal exactly twice the amount of continuous ventilation you entered in the green box above

Notes

This is the note box

State of Washington, Weatherization Assistance Program

Technical Support Document

Mechanical Ventilation Worksheet

ASHRAE 62.2-2013

This document is intended to support in detail the Mechanical Ventilation Worksheet (Exhibit 9.3). The worksheet is designed to be both a calculation and documentation tool. **The Mechanical Ventilation Worksheet is only for calculating projects using a continuous whole building ventilation strategy and for which all necessary inputs are reflected on the sheet.** For all other projects within the scope of ASHRAE 62.2-2013 refer directly to the standard for calculation guidance.

The upper portion of the Mechanical Ventilation Worksheet is for recording pre-weatherization conditions of the project and to help estimate continuous ventilation to be added. **If you plan to use an intermittent strategy for whole building ventilation you must refer directly to the standard.**

The lower portion of the Mechanical Ventilation Worksheet is for recording post-weatherization conditions and documenting compliance with ASHRAE 62.2-2013.

User entries to the worksheet are made in the GREEN BOXES.

NOTE: For best results ALWAYS use a fresh worksheet template. For user convenience some of the data transfers to other areas of the sheet. Starting with a fresh template will help ensure old data is not causing an erroneous result.

For convenient simplified instructions while working on the worksheet simply hover the cursor over cells with a red triangle in the upper right hand corner. Comment boxes should appear with abbreviated help notes.

Line #1 Pre-Weatherization Blower Door Reading cfm50

Enter the cfm50 from the initial audit prior to any weatherization work per Commerce s4.1.

Line #2 People

Enter the total number of occupants. May not be less than one. *Per ASHRAE 62.2-2013 section 4.1.1*

Line #3 Bedrooms

Enter the number of bedrooms. Not to be less than one. *Per ASHRAE 62.2-2013 section 4.1*

Calculation: The yellow box on this line calculates (number of bedrooms +1)*7.5 OR (number of occupants)*7.5, Whichever is greater. *Per ASHRAE 62.2-2013 section 4.1.1*

Line #4 Conditioned Square Footage

Enter total conditioned square footage for the building.

Calculation: The yellow box on this line calculates (conditioned square footage)*.01

Line #5 Fan Flow Required (*Qfan*)

This is a calculated value as defined as *Qfan* in ASHRAE 62.2-2013 section 4.1. This value will be at, or below the value shown in ASHRAE 62.2-2013 table 4.1a.

Note regarding lines #6-9

This section is to determine any local exhaust deficits. Each line has four possible boxes for user entry. The first two boxes on the left of each line require a "y" entry if the room exists in the building or an operable window exists in a room. You may enter "n" in these boxes if the response is no, or leave the box blank. The entire line may be left blank if the "room exists" response is no.

The default deficit on each line is "None". When the room indicator is set to "y" the required intermittent ventilation will show in the deficit column. ASHRAE 62.2-2013 does not require these deficits to be overcome but the whole building ventilation system must make up for any deficiency. Consult Commerce specifications, especially section 10, for other fan location requirements dependent upon building conditions such as excess moisture and gas ranges.

STRATEGY NOTE: Experimenting with different fan strategies on lines 6-10 can help the auditor achieve a whole building ventilation strategy using lower cfm continuous fans in required ventilation rooms. For file documentation purposes return the entries in the boxes to the actual measured values prior to printing, or saving the document.

This section assumes all fans entered are properly vented, or will be vented to the exterior during the weatherization process.

Line #6 Kitchen

In the "Intermittent Measured Fan" column enter the measured fan flow in cubic feet per minute (cfm) for any existing intermittent fan which is vented to the exterior of the building. See Commerce specification 10.0.3 for additional information flow measurement and exceptions. This column may be left blank if there is no fan, the fan has no flow, or is not vented to the exterior.

IF a continuous fan exists calculate the air changes per hour (ach) and enter this value in the "Continuous Measured" column. To calculate air changes per hour determine measured fan flow rate per hour (fan cfm*60) and divide it by the volume of the kitchen (Volume = length*width*height).

- Example: Kitchen dimensions are: 10' width by 12' length by 8' height and the continuous measured fan flow is 22 cfm. Volume = 10*12*8 = 960 cubic feet, Hourly fan flow = 22*60 = 1320 cubic feet per hour, 1320/960 = 1.375 ach.

Line #7 through #9 Bath 1, 2 or 3

Enter only rooms meeting the definition of a bathroom on these lines. Per ASHRAE 62.2-2013 definitions a bathroom is: any room containing a bathtub, a shower, a spa, or a similar source of moisture. Do not enter ½ baths, water closets etc*.

Enter existing intermittent fan flows in the third column of this section. If continuous fans exist enter the fan flow in cfm in the fourth column.

**Note: Intermittent fans in ½ baths, water closets, laundry rooms etc. shall not be entered on this worksheet. Properly vented continuous fans in these types of areas should be listed on line 18.*

Line #10 Total Deficit

This line represents the existing deficit in local ventilation per ASHRAE 62.2-2013 Normative Appendix A *especially section A.3.1*.

Line #11 Required Additional Airflow

The additional airflow required is the total deficit divided by four (per ASHRAE 62.2-2013 Normative Appendix A *especially section A.3.3*). This ventilation requirement can be overcome by addressing local ventilation issues in rooms requiring specific ventilation, through the whole building ventilation fan, or a combination of both.

Line #12 Needed Ventilation Estimate (prior to credits)

This entry is a sum of lines 5 and 11.

Line #13 Actual Infiltration Estimate

For most accurate estimate enter a blower door reading taken after air sealing and any other measures significantly affecting building tightness in the first box. If no other reading is entered, CFM50 from line 1 will automatically transfer here.

A value from the "N-Values for Infiltration Credit" table must be entered in the second box on this line. This value should be determined using the city which most accurately reflects the location and climatic conditions and the number of stories for the building. The default value is a one story building in Olympia, WA. *Note: Portland Oregon is included to more accurately address conditions in southwest Washington.*

The third box on this line is a function of the blower door number divided by the N-Value.

Line #14 Assumed Infiltration

ASHRAE 62.2-2013 assumes an infiltration rate of 2cfm per square foot of the building (per ASHRAE 62.2-2013 section 4.1.3). The first box on this line reflects the square footage entered on line 4. The second box is a function of the square footage multiplied by .02.

Line #15 Infiltration actual minus assumed

This line is merely a function of the actual measured infiltration from line 13 less the ASHRAE assumed value on line 14. If the value is zero or less there will be no infiltration credit and the assumed value is automatically included in the required ventilation calculation.

Line #16 Infiltration Credit

Per ASHRAE 62.2-2013 section 4.1.3 the infiltration credit allowed is ½ of the difference between the actual and assumed ventilation. No increase is required if the measured infiltration is lower than the assumed rate.

Line #17 Sum of existing bathroom ventilation

ASHRAE 62.2 currently does not include a provision for partial credit of continuous local ventilation in the deficit calculation (lines 6-10). Continuous ventilation is included in lines 6-10 for the purpose of overcoming the deficit if the fan flow is in excess of the required amounts (5 ach Kitchens and 20 cfm Bathrooms). These continuous amounts should be counted as part of a whole building continuous strategy. Any continuous bath fan ventilation is summed and transferred to this line. (See also Strategy Note regarding lines #6-9 above)

Line #18 Other Continuous Ventilation (including kitchen cfm)

If there is any other existing continuous ventilation that is expected to remain such as laundry, water closet, whole building, etc. sum all cfm and enter it here. Since kitchen ventilation was entered in ach on line 6 the actual cfm must be manually entered as part of this line total.

Line #19 Estimated Continuous Ventilation to Add

This line is the estimated continuous ventilation needed to meet ASHRAE 62.2-2013. The value is a function of line 12 subtracting lines 16, 17 and 18. If the total is less than zero the box will indicate "None".

Repeated from above:

STRATEGY NOTE: Experimenting with different fan strategies on lines 6-10 can help the auditor achieve a whole building ventilation strategy using lower cfm continuous fans in required ventilation rooms. For file documentation purposes return the entries in the boxes to the actual measured values prior to printing, or saving the document.

Estimate Notes

Be sure to record any relevant pre-weatherization or estimate notes in the box for file documentation.

Lines #20-23

All instructions for these lines are synonymous to the corresponding cells in lines #1-5 above. For user convenience values will transfer from original entries. If people, bedrooms or square footage have change simply enter the new values in the green boxes.

Lines #24-27

All instructions for these lines are synonymous to the corresponding cells in lines #6-9 above. For user convenience values will transfer from original entries in the "room exists" and "operable window" columns. Post weatherization (final flow) measurements are required for all required fans. These numbers must be manually entered in this section when utilized the Mechanical Ventilation Worksheet to demonstrate compliance with the standard.

Lines #28-30

No entry required. All instructions and explanations for these lines are synonymous to the corresponding cells in lines #10-12 above.

Line #31Final Blower Door cfm50

Enter the post weatherization blower door number in cfm50. The N-Value will transfer from the previous section. If you did not enter a proper N-Value in the upper section of the worksheet (from the "N-Values for Infiltration Credit" table) you must do so now. The actual building infiltration will calculate automatically by dividing the post weatherization blower door cfm50 by the N-Value.

Lines #32-34

No entry required. All instructions and explanations for these lines are the same as lines #14-16 above.

Line #35 Sum of Continuous Bath Fan Ventilation

No entry required. All instructions and explanations for this line are the same as line #17 above.

Line #36 Other Continuous Ventilation (including kitchen cfm)

Enter the total cfm of all continuous ventilation that **is not** shown on lines 25-27. **IMPORTANT NOTE Any continuous kitchen ventilation entered in ach on line 24 must be manually entered in cfm as part of this line total** (Measure post weatherization cfm of continuous kitchen fan or use other approved Commerce/ASHRAE 62.2-2013 method to determine flow value).

Line #37 Continuous Ventilation Required

This line is the continuous ventilation still needed to meet ASHRAE 62.2-2013. The value is a function of line 61 subtracting lines 34, 35 and 36. This value must be at, or less than "0" to demonstrate compliance to the standard. A negative number represents the amount of over-ventilation installed. Adjust fans/ventilation strategy to get the closest result to "0" if the equipment and building conditions allow it.

Final Project Notes

Be sure to record any relevant post-weatherization or other final notes in the box for file documentation.

Abbreviations:

ach: air changes per hour

cfm: cubic feet per minute

cfm50: leakage rate measured at a pressure of 50 pascals

Terms:

Air handler – A steel cabinet containing a blower with cooling and/or heating coils connected to ducts, which transport indoor air to and from the air handler.

Backdrafting – Continuous spillage of combustion gases from a combustion appliance.

Bimetal element – A metal spring, lever, or disc made of two dissimilar metals that expand and contract at different rates as the temperature around them changes. This movement operates a switch in the control circuit of a heating or cooling device.

Burner – A device that facilitates the burning of a fossil fuel like gas or oil.

Carbon monoxide – An odorless and poisonous gas produced by incomplete combustion.

Combustion air – Air that chemically combines with a fuel during combustion to produce heat and flue gases, mainly carbon dioxide and water vapor.

Combustion analyzer – A device used to measure steady-state efficiency of combustion heating units.

Depressurize – Cause to have a lower pressure or vacuum with respect to a reference of a higher pressure.

Dilution air – Air that enters through the dilution device --- an opening where the chimney joins to an atmospheric-draft combustion appliance.

Dilution device – A draft diverter or barometric draft control on an atmospheric-draft combustion appliance.

Draft diverter – A device located in gas appliance chimneys that moderates draft and diverts down drafts that could extinguish the pilot or interfere with combustion.

Fan control – A bimetal thermostat that turns the furnace blower on and off as it senses the presence of heat.

Flue – a channel for combustion gases.

Heat anticipator – A very small electric heater in a thermostat that causes the thermostat to turn off before room temperature reaches the thermostat setting, so that the house does not overheat from heat remaining in the furnace and ducts after the burner shuts off.

Heat rise – The number of degrees of temperature increase that air is heated as it is blown over the heat exchanger. Heat rise equals supply temperature minus return temperature.

High limit – A bimetal thermostat that turns the heating element of a furnace off if it senses a dangerously high temperature.

House pressure – The difference in pressure between the indoors and outdoors measured by a manometer.

Inch of water – Small air pressure differences caused by wind, blower doors, furnace fans, and chimneys are measured in inches of water (in.-H_20) in the American measurement system.

Input rating – The rate at which an energy-using device consumes electricity or fossil fuel.

Intermittent ignition device – A device that lights the pilot light on a gas appliance when the control system calls for heat thus saving the energy wasted by a standing pilot.

Make-up air – Air supplied to a space to replace exhausted air.

Manometer –Measuring device for small gas pressures

Mortar – A mixture of sand, water, and cement used to bond bricks, stones, or blocks together.

Net free area – The area of a vent after that area has been adjusted for insect screen, louvers, and weather coverings. The free area is always less than the actual area.

Open-combustion heater – A heating device that takes its combustion air from the surrounding room air.

Orphaned Natural Draft Water Heater - A natural draft water heater vented into an oversized chimney.

Oxygen depletion sensor (ODS) – A safety device for unvented combustion heaters that shuts gas off when oxygen is depleted.

Pascal – A unit of measurement of air pressure. (See Inch of water.)

Plenum – The piece of ductwork that connects the air handler to the main supply duct.

Pressure – A force encouraging movement by virtue of a difference in some condition between two areas.

Return air – Air circulating back to the furnace from the house, to be heated by the furnace and supplied to the rooms.

Room heater – A heater located within a room and used to heat that room.

Sealed-combustion heater – A heater that draws combustion air from outdoors and has a sealed exhaust system.

Space heating – Heating the living spaces of the home with a room heater or central heating system.

Spillage – Temporary flow of combustion gases from a dilution device.

Stack effect – The draft established in a building from air infiltrating low and exfiltrating high.

Stand-Alone Natural Draft Water Heater - A natural draft water heater vented into a properly-sized chimney in accordance with NFPA 31 for oil-fired units, NFPA 54 for gas-fired units, NFPA 58 for propane-fired units and NFPA 211 for solid-fueled units or the venting tables of a chimney liner manufacturer.

Steady-state efficiency – The efficiency of a heating appliance, after an initial start-up period, that measures how much heat crosses the heat exchanger. A combustion analyzer measures the steady-state efficiency.

Supply air – Air that has been heated or cooled and is then moved through the ducts and out the supply registers of a home.

Vent connector – The vent pipe carrying combustion gases from the appliance to the chimney.

Vent damper – An automatic damper powered by heat or electricity that closes the chimney while a heating device is off.

Venting – The removal of combustion gases by a chimney.

Worst-case depressurization test –A safety test, performed by specific procedures, designed to assess the probability of chimney back drafting.

WRT – "With respect to" used to show that the air pressures between two areas are being compared.

Zone – A room or portion of a building separated from other rooms by an air barrier----not usually an effective air barrier.

Cementitious Asbestos Board (CAB)

This section refers to exterior siding shingles, flat panels, and corrugated panels.

Adhere to the following steps without exception unless a written work plan is provided by the Program Manager and that work plan stipulates variations of standard process:

Exterior Siding Shingles:

1. Pre-clean work area (including non-ACM debris) and create unobstructed working area.
   a. Install appropriate barriers, signage and posters.
   b. Deactivate energy sources within work area.

2. Set up work area:
   a. Water, power, equipment, tools, containers, ladders/scaffolding, de-con.

3. Don Personal Protection Equipment:
   a. Respirators, tyveks, boots/gloves and personal air pump(s).
   b. Set area pumps.

4. Lay ground sheet (poly-ethylene).
5. Abatement Process:
   a. Wet surfaces to be abated with amended water (surfactant added).
   b. Begin at bottom and carefully remove nails to allow whole piece removal.
   c. Set removed pieces on working surface or ground. DO NOT DROP TO GROUND!
   d. Bag or wrap removed pieces while wet and remove to drop box or other container.
   e. Pull all nails and moisture barrier (tar paper) and treat as ACM debris.
   f. Inspect abated surface and 'detail' area including ground sheet before moving on.
   g. Be sure all bags/wrapped units are properly labeled with all required data.
   h. Continue process from bottom to top taking care to pull nails and not break CAB.
   i. Final inspection, detail and cleanup (by Supervisor and all crew members).
   j. Clean all equipment and tools before replacing into company vehicles.
   k. Check all paperwork for completion: Daily logs, air monitoring and timesheets.
   l. De-con and demobilize site.
   m. When back to shop unload all debris into drop box, cleanup (as needed) vehicle.
   n. Make note of any damaged equipment or tools to allow for repair or replacement.

Flat (panel) CAB:

   a. Follow process for exterior shingles.

Note: Vehicles should be returned fully gassed and with oil and water checked for next day.

Acoustical Ceiling Texture ('Popcorn')

Note: This SOP is designed for 'incidental' removal/disturbances of ACT during activities such as changing lighting fixtures, installing smoke alarms or removal of less than three square feet of the material due to water or other damage. This SOP is NOT intended for use on full-scale abatement projects.

Incidental removal of ACT:

1. Pre-clean immediate work area (floor).
   a. Install critical barriers over vents and openings within six feet of regulated area.
   b. Deactivate energy source for target work area.
2. Install PVC and 6 mil poly unit directly beneath target work area (within 1" of ceiling).
3. Use electrical power through an extension cord with a GFCI attached and checked.
4. Don Personal Protection Equipment:
   a. Full-face APR respirator, two tyvek, gloves, and personal air sampling pump.
5. Wet/mist target work area prior to disturbance/removal of ACT.
6. Removal:
   a. Install HEPA vacuum nozzle into PVC/poly unit as an engineering control,
   b. Use flat scraper to gently remove ACT from ceiling substrate,
   c. Place removed material into disposal bag or other disposable container,
   d. Damp wipe all cleaned surfaces,
   e. Remove fixture, damp wipe and pass outside of PVC/poly unit on a drop sheet,
   f. Inspect wiring and install new fixture,
   g. Collect all waste and double bag into labeled 6 mil ACM disposal bags,
   h. Wipe down and pass step ladder out of PVC/poly unit,
   i. Wet, fold and bag drop sheet,
   j. HEPA vacuum workers' outer body cover and bag as ACM waste,
   k. Inspect and damp wipe/HEPA vacuum interior base of PVC/poly unit,
   l. Mist inside of PVC/poly unit with penetrating encapsulant,
   m. Remove inner tyvek and bag as ACM waste,
   n. Place duct tape over HEPA vacuum nozzle and exhaust port,
   o. Carefully, remove PVC/poly unit from work area and
   p. Conduct final inspection before departing,
   q. Conduct clearance air sample if desired,
   r. Decon and demobilize site,
   s. When back to shop unload all debris into drop box, cleanup (as needed) vehicle,
   t. Make note of any damaged equipment or tools to allow repair or replacement.

Note: Vehicles should be returned fully gassed and with oil and water checked for next day.

Note: A piece of cardboard or other pad should be placed inside the PVC/poly unit to protect against tears from ladder feet and subsequent water damage to floors.

Vinyl Asbestos Tile (VAT)...and Mastic

This section refers to VAT (9" or 12") and Mastic on either wood or concrete surfaces.

Adhere to the following steps without exception unless a written work plan is provided by the Program Manager and that work plan stipulates variations from standard process.

1. Pre-clean work area (including non-ACM debris) and create unobstructed work area.
   a. Install appropriate barriers, signage and posters.
   b. Deactivate energy sources within work area
2. Set up work area:
   a. Water, power, equipment, tools, solvent, sawdust, etc.,
3. Don Personal Protection Equipment:
   a. Respirators, tyveks, boots/gloves, personal air pump(s).
   b. Set area pumps.
4. Set up wall protection ('splash' sheets).
5. Abatement process:
   a. Wet floor surface.
   b. Begin scraping tile at edges/corners and work in a planned direction.
   c. Bag/box ACM while wet.
   d. Be sure all bags/boxes are properly labeled with all required data.
   e. Detail floor area with broad, thin scrapers.
   f. Inspect all edges, window ledges and crevices for chips and pieces.
   g. Begin Mastic removal by applying controlled amount of solvent to floor (agitate).
   h. Begin in a corner and work in a planned direction.
   i. Use squeegees to push emulsified mastic and solvent mass into a 'pool'.
   j. Add sawdust to create a solid mass for pickup and containerization (bagging).
   k. Inspect entire floor area for chips, pieces and mastic 'goobers' and detail all areas.

Note: Inspection should be directed by Supervisor and conducted by all Crew Members.

   l. Clean all equipment and tools before reloading into company vehicles.
   m. Check all paperwork for completion: daily logs, air monitoring and timesheets.
   n. Decon and demobilize site.
   o. When back to shop unload all debris into drop box, cleanup (as needed) vehicle.
   p. Make note of any damaged equipment or tools to allow for repair or replacement.

Note: Vehicles should be returned fully gassed and with oil and water checked for next day.

Encapsulation of presumed asbestos tape

Asbestos tape is associated with duct work on older residential heating systems. This tape is usually white or gray in color and is found on furnaces, ducts, and pipes. During weatherization work, it may be necessary to seal leaks in ductwork or add insulation over the tape to comply with State weatherization specifications and standards. This tape may be intact, damaged or showing signs of deterioration. This tape should be considered to contain asbestos or proved not to contain asbestos by a certified AHERA (Asbestos Hazard Emergency Response Act) building inspector survey.

Under AHERA regulations, any material or product found to contain more than 1% asbestos is considered an asbestos containing material (40 CFR Part 763).

Asbestos tape is considered Thermal System Insulation (TSI) by Washington State Labor and Industries, whenever it is applied to pipes, fittings, boilers, breaching, tanks, ducts, or other structural components to prevent heat loss or gain (WAC 296-62-0773). Under WISHA (Washington Industrial Safety & Health Act) encapsulation of asbestos TSI tape would be considered class 3 asbestos work (WRD 23.10). Worker certification is not required if the encapsulation work is less than 1 square foot except on pipe insulation. If the work is 1 square foot or greater and the material is damaged or deteriorated in the form of dust, debris, and waste then asbestos worker certification is required.

The application of duct tape re-wetting glass cloth, canvas, cement, paint, or other non-asbestos materials to seal or fill exposed areas where asbestos fibers may be released is not considered an asbestos project according to the Northwest Clean Air Agency (NWCAA). Therefore, no prior notification is required.

……

Note: When two (2) or more agencies of jurisdiction have regulations (or lack of regulations) on a common issue, contractors and others who come under the agencies' jurisdiction must comply with the more stringent rule. As noted above, NWCAA does not consider the application of re-wetting materials or other sealants over damage 'duct tape' as an asbestos project and does not require notification…this does NOT relieve the organization from complying with the Department of Labor & Industries regulations. Therefore, as mentioned above, the Department of Labor & Industries would consider the 'repair or maintenance' of less than one foot of this material as Class III Work. Training requirements for Class III Work include an initial course of sixteen (16) hours duration and the passing of a final exam with a score of 70% or better. An annual refresher course of 3-4 hours is also required to maintain the certification.

For reference and review purposes, this material shall be referred to as 'Duct Tape'.

.

Managing the
Low-Income Weatherization Program

References

1. **CFR (Part, Subpart Number)** – Title #, Code of Federal Regulations, Part/Subpart #

   For example, 10 CFR 440 (Weatherization Assistance Program for Low-Income Persons)

   http://www.gpoaccess.gov/cfr/retrieve.html

2. **WPN #, Date** – Weatherization Program Notice (Dates will Vary)

   For example, WPN 05-1, 2004 (Program Year 2005 Weatherization Grant Guidance)

   http://www.waptac.org/sp.asp?id=6878

3. **OMB #** – Office of Management and Budget Circulars, Number of Circular

   For example, OMB A- 87 (Cost Principals for State, Local, and Indian Tribal Governments)

   http://www.whitehouse.gov/omb/circulars/

4. **WAC #** – Washington Administrative Code Title, Chapter, Section

   For example, WAC 51-13-402 (Solid Fuel Burning Appliances and Fireplaces)

   http://apps.leg.wa.gov/wac/

5. **RCW #** - Revised Code of Washington Title, Chapter, Section

   For example, RCW 46.12.095 (Requirements for Protecting Security Interest)

   http://apps.leg.wa.gov/rcw/

6. **Commerce General Terms & Conditions** – Department of Commerce General Terms & Conditions
7. **WAP Health & Safety Plan** – Weatherization Assistance Program Health & Safety Plan
8. **Specifications for the Low-Income Weatherization Program** – Department of Commerce
9. **Commerce Monitoring Protocol** –Department of Commerce
10. **EOW Field Guide** – Energy OutWest Field Guide
11. **DOE Special Terms & Conditions** – Department of Energy Special Terms & Conditions

12. **HHS Special Terms & Conditions** – Department of Health & Human Services Special Terms & Conditions
13. **BPA Special Terms & Conditions** – Bonneville Power Administration Services Special Terms & Conditions
14. **MM Special Terms & Conditions** – Matchmakers Services Special Terms & Conditions
15. **Commerce Energy Assistance Program Policies**

    http://www.liheapwa.org/policy/

Department of Commerce
Innovation is in our nature.

Multi-Family Supplement
Draft Guidance

For Managing the Low-Income Weatherization Program

Multi-Family Supplement - Table of Contents (TOC)

for
United States Department of Energy (DOE)
United States Department of Health and Human Services (HHS)
Bonneville Power Administration (BPA)
and
Matchmakers (MM)

Prepared By:
Washington State Department of Commerce
Community Services and Housing Division

April 2009 Edition

(with 2010 through 2014 revisions)

WEATHERIZATION WORKS

Multi-Family Supplement
Draft Guidance

for Managing the Low-Income Weatherization Program

Table of Contents

Last Modified

Chapter 1 Policies

Section 1	Eligibility	April 2011
Section 2	Owner Agreement	April 2011
Section 3	Owner Contribution and Period of Affordability	April 2011
Section 4	Audit Requirements	April 2011
Section 5	Diagnostic Testing	July 2014
Section 6	In-progress Inspection	April 2011
Section 7	Inspection Requirement	April 2011
Section 8	Final Closeout	April 2011

Chapter 2 Specifications (SWS for Multifamily Homes)

Section 1	Lighting	July 2012
Section 2	Lighting Controls	April 2011
Section 3	Exhaust Ventilation with Common Venting	July 2013
Section 4	Installation of replacement windows	April 2011
Section 5	Ductless Heat Pumps – See SF Spec Sec 12	July 2013
Section 6	Residential Heat Pump Water Heaters	April 2011

Chapter 3 Definitions

Exhibit 1	Definitions	July 2013

Chapter 4 Exhibits

Exhibit 1	Owner Agency Agreement MF	April 2011
Exhibit 2	DOE EERE WAP Introduction to Multifamily	April 2011

Multi-Family Requirements *DRAFT – 06/06/2013*

Eligibility
Types 1-5 – Policy 1.5

Owner Agreement
Types 1-5 – *See Exhibit 1*

Owner Contribution (OC) and Period of Affordability Agreement
Type 1 – Same as Single Family Dwelling (SFD)
Type 2, 3, 4, and 5 -

1. Less than 25 units/3 year Affordability Agreement:
    a. OC: $500 for first 2 units ($250 each), $100 each unit after
    b. Owner pays for repairs needed to allow Wx (OC may pay for pre project repairs – invoice required). Repairs must be complete prior to Wx work starting.
        i. Exception to #5 (Prior) OC for 25 units or less/3 year agreement:
            1. OC: $500 for first 2 units ($250 each), $100 each unit after (amount invested by owner may offset required OC)
            2. Owner investment for allowable Wx related repair prior to Wx project start may offset required OC
            (invoice required: work completed correctly, licensed contractor, invoice dated not more than one year prior to Wx project start).

2. Less than 25 units /10 year Affordability Agreement:
    a. OC: $250 for first 2 units ($125 each), $50 each unit after
    b. Owner pays for repairs needed to allow Wx (OC may pay for pre project repairs – invoice required). Repairs must be complete prior to Wx work starting.

3. 25 units and more/3 year Affordability Agreement:
    a. OC: $1000 for the first 2 units ($500 each), $250 each unit after
    b. Owner pays for repairs

4. 25 units and more/10 year Affordability Agreement:
    a. OC: $500 for the first 2 units ($250 each), $100 each unit after
    b. Owner pays for repairs

Type 5 (only):

5. Owner Contribution for a Wx TREAT Project/10 year Affordability Agreement
    a. TREAT defines OC

Audit Requirements
Type 1-4 - TREAT or Priority List
Type 5 – TREAT Required

Diagnostic Testing

Type 1 – Same as SFD – Every unit
Type 5 – To be determined
Type 2-4:

1. Multi-Family Blower Door Testing:

   Blower door testing is optional. However, without blower door testing the amount of air sealing work you can justify may be limited because the default numbers for prescriptive air sealing work are conservative.

   If blower door testing is performed, a "Representative sample" will inform strategy or need for mechanical ventilation and air sealing.

   a. Individual unit testing Representative sample

      (1) Blower door test 10% of all units in a multi-family project.

      Exception: In a multi-family project with 25 units or more, test only 5% of the units over 25.

      (2) The overall test must represent a diversified sample. At a minimum, the Local Agency shall test one unit on each level of a building, one corner unit, and one center (interior) unit, if applicable.

   b. Entire Building blower door testing

      (1) When possible, in addition to the 10% unit representative sample, Blower door test leakage to outside for an entire building in a complex of similar age and construction and extrapolate.

      Exception: When blower door testing of the entire building is not possible, use historical data as default pre- and post-weatherization numbers for use in TREAT.

2. Infiltration:

   a. Air sealing shall be performed between conditioned and unconditioned spaces at all accessible floors, walls, and ceilings (garages, attics, and crawlspaces.)

   b. Transfer Air: Measures shall be taken to minimize air movement across envelope components separating dwelling units, including sealing penetrations in the common walls, ceilings, and floors of each unit and by sealing vertical chases adjacent to the units. All doors between dwelling units and common hallways shall be gasketed or made substantially airtight.

(1) Compliance: One method of demonstrating compliance with the Transfer Air requirements above shall be to verify a leakage rate below a maximum of 0.2 cfm per ft^2 (100L/s per 100 m^2) of the dwelling unit envelope area (i.e., the sum of the area of walls between dwelling units, exterior walls, ceiling, and floor) at a test pressure of 50 Pa by a blower door test conducted in accordance with either ANSI/ASTM-E779, *Standard Test Method for Determining Air Leakage Rate By Fan Pressurization*, or ANSI/ASTM-E1827, *Standard Test Methods for Determining Airtightness of Buildings Using an Orifice Blower Door*. The test shall be conducted with the dwelling unit as if it were exposed to outdoor air on all sides, top, and bottom by opening doors and windows of adjacent dwelling units.

(2) Compliance: Another method of compliance with the Transfer Air requirements above is visual inspection and documentation.

c. Compartmentalization is prescriptive air sealing that effectively separates the individual apartment units from one another. Compartmentalization is allowable as part of a prescriptive or blower door guided air sealing package, which includes air sealing between conditioned and unconditioned spaces of the building, provided the added cost of prescriptive, unit by unit, compartmentalization does not cause the SIR for infiltration reduction to be less than 1.0. Compartmentatlization by prescriptive air sealing between units may improve (among other benefits) combustion safety, indoor air quality, and tenant heating expenses.

d. Blower door assisted air sealing optional.

3. Combustion Safety Testing:

Combustion Safety Testing is required on all units having a combustion appliance. Combustion safety problems identified through testing shall be resolved. CO detectors shall be installed before any modification to shell or HVAC systems.

4. Defaults for TREAT:

a. TREAT air exchange default for existing building remain 0.6 ACH

b. Attic and crawlspace only, prescriptive air sealing (no blower door testing) default for improvement is a conservative 0.05 reduction or 0.55 ACH for calculating the SIR of infiltration reduction measure.

c. Attic and crawlspace plus dense-pack of sidewall and band joist, prescriptive air sealing (no blower door testing) default infiltration reduction of 50% from 0.6ACH to 0.3ACH.

d. Under no circumstance shall the estimated infiltration reduction exceed 50%.

In-progress Inspection

Type 1-5 – Same as SFD – In progress inspection required prior to payment for work completed. Payments to contractors or Local agency reimbursements are restricted to measures completed and inspected within a MF building or a completed and inspected building within a MF complex.

Inspection Requirement

Type 1-5 - 100% of all units Weatherized

Final Closeout

Under Development

Proposed Multi-family Specifications, *Draft 3-2-11*

Section 1.0 Lighting

MF TOC

1.1 Tenant controlled *(TREAT only or SCL spreadsheet or DOE SIR calc by hand? (measure cost, discount rate, and …??) ***Supporting docs: Zach has a worksheet*

1.1.1 Tenant controlled lighting fixtures

Any incandescent fixture controlled by tenant may be replaced with energy efficient fluorescent or LED lighting fixtures provided the SIR greater than 1 requirement is met. Fixtures in low use locations shall not be replaced. Fixtures to be replaced shall be hardwired. Plug in lamps are not eligible for replacement.

Exception: Halogen Torchiere style lamps may be replaced.

1.1.2 Tenant controlled incandescent bulbs

Incandescent bulbs located in the tenants unit may be replaced with one piece screw in compact fluorescent bulbs (CFLs) except in closets, storage areas and other low use locations.

1.2 Common area lighting *(H&S measure?)*

Incandescent and T-12 fluorescent lighting systems in common areas may be replaced with efficient fixtures and controls provided the specifications in this section and the SIR greater than 1 requirement is met. Common areas include but are not limited to halls, stairs, entryways, exterior building lights, parking lots and garages.

1.3 Certification

All lighting products must be of current manufacture and certified by an approved testing laboratory (UL, ETL, etc.).

1.4 Licensing

Licensed electrical contractors must perform all lighting retrofit work unless otherwise allowed by local code regulations.

1.5 Light levels *(H&S measure?)*

Appropriate illumination levels must be provided. The contractor must offer the owner the correct lamp brightness for the area to be illuminated, based on Illuminating Engineer Society (IES) recommended illumination levels.

1.6 Permits

All applicable permits must be obtained prior to installation of lighting measures.

Cost for required permits shall be included as part of the overall bid.

1.7 Documentation

1.7.1 Manufacturer's technical product data

The installer must provide the building owner with manufacturer's technical product data on the light fixtures, ballasts, luminaries and controls as a part of their lighting bid.

1.7.2 Project file

File maintained by the local agency shall include the information needed to calculate the SIR:

a. ENERGY STAR Fixture Manufacturer name and model number
b. Location of fixtures to be replaced
c. Estimated use patterns (TREAT default)
d. Quantity of fixtures, itemized by fixture type
e. Total bid amount (labor and materials)
f. Documentation of proper disposal of old fixtures, lamps and ballasts

1.8 Warranty

The installing contractor shall provide a minimum 1-year labor warranty and may pass through a manufacturer's warranty.

1.9 Disposal *(Require Program to Recycle lamps – leave approximately 10% new lamps to start program??. Minimum 10 lamps. Make it part of client education??)*

Old fluorescent lamps and ballasts must be removed from the project site and disposed of or recycled as mandated by Federal, State, and local regulations. Costs for lamp and ballast disposal shall be included in the overall bid.

1.10 Specifications

a. Approved lighting technologies include T-5 & T-8 linear (electronically ballasted), 2-piece compact fluorescent, metal halide, high-pressure sodium, LED light fixtures and exit signs.

b. Ineligible technologies include T-10 and T-12 fluorescent, incandescent (including halogen), mercury vapor, neon, and low voltage.

c. All lamps must have a CRI of 70 or better (except high-pressure sodium).

d. All fixtures/ballasts must be high power factor (.9 or better).

e. All fixtures and controls must be hardwired.

f. Where fluorescent lamps are used, low mercury content is strongly urged.

g. LED exit signs must meet UL 924. See local fire codes for requirements.

h. Health and safety requirements must be met on all light fixtures located over areas such as gyms, daycare, food preparation, hazardous vapor locations, etc.

i. All exterior fixtures must be suitable for damp or wet locations.

j. All exterior fixtures must be operated by a control or have an integrated photo sensor that automatically prevents operation during daylight hours. The control must automatically reactivate within 24 hours of manual override or testing operation.

Section 2.0 Lighting Controls

MF TOC

Occupancy sensors, Photo cells and Timers that control when and how long lighting fixtures are on in common areas are an allowable expense when installed to allow a reduced time on for the fixture (s) they control and meet the SIR greater than 1 requirement.

2.1 Documentation of controls installed

a. Make and model of control installed
b. Location of fixtures controlled
c. Number of fixtures controlled
d. Estimated savings in kWh and dollars for control strategy
e. Cost to install controls

Building manager or owner shall receive education of how controls are designed to work

Section 3.0 Exhaust Ventilation with Common Venting

MF TOC

The following guidance applies to low rise residential three (3) stories and below. ASHRAE Standard 62.1 applies to four (4) stories and above.

A single exhaust fan (remote mount) picking up kitchen and bath in multiple units shall be sized according to the requirements detailed in ASHRAE 62.2.

If continuous exhaust is used in the bathroom and kitchen, ASHRAE 62.2 requires 20 cfm per bathroom and 5 ACH for the kitchen. Maximum measured flow per unit shall not exceed 30 cfm per bathroom continuous and 7.5 ACH per kitchen continuous.

The local agency or its contractor shall measure a representative sample (20 percent) of the exhaust flows in the building to determine the range of flow in units at each level of the building.

If the measured flow is not within the specified range (above), efforts must be made to achieve compliance. Local agencies must document the efforts made in the project file.

To achieve the desired operation pressure and balance across the system, it may be necessary to clean or replace the existing fan, seal accessible duct and boot connections, or specify a balancing device (constant air regulating (CAR) damper) at each exhaust point.

Section 4.0 Installation of replacement windows

MF TOC

Windows shall be installed in accordance with manufacturer's specifications and applicable code requirements so as to provide a tight, long-lasting, weatherproof installation. When completed, interior and exterior surfaces shall have a neat, finished appearance.

4.1 Thermal and structural performance.

All materials shall be of sufficient strength and durability so as to resist damage or distortion from wind loads, thermal stress (including from solar gain), or stresses induced during installation.

4.1.1 Windows and glass doors must have an overall building average NFRC thermal certification of Class .30 or better. U value of installed windows shall be .3 or lower

4.1.2 Windows must be in compliance with ANSI/AAMA requirements.

4.1.3 Windows shall not be installed where underlying framing material has deteriorated or does not possess adequate strength, support or anchorage.

4.2 Operation

After installation, units shall operate smoothly and properly and access to latches shall not be impaired. Hardware shall be durable, function properly, and not create interference. When closed, the entire assembly shall provide a complete weather-barrier to the entire opening. Vertically hung sliders shall effectively prevent "free fall."

4.3 Sizing

The Installer shall assure the correct size, shape, and type of windows for the openings. Each window shall be measured for appropriate clearances to match the prime window or prime opening. Care should be taken to follow window egress requirements of the local building code authority. The installer should not reduce the net free opening area of existing egress windows, and if the existing window's net free opening area is smaller than the current code requires, it should be increased through window reconfiguration if possible. (See IBC Section 1025 for details.)

4.4 Photos and Documentation

Photos original spec language plus

4.4.1 Documentation

The local agency project file shall contain and the installer must supply the customer with manufacturer's technical product data including:

a. The number of windows and location
b. Configuration by size and style (e.g.; 2'x4' horizontal slider)
c. NFRC rating of each window configuration
d. Manufacturer name, window series, and model number
e. Window manufacturer's warranty
f. Contractor installation warranty

4.5 Flashing Required

4.5.1 Water intrusion.

Windows shall be flashed and sealed in accordance with code and manufacturer's specifications to prevent water intrusion into the wall cavity. Gaps and cracks exposed to the elements shall be caulked on both existing and added framing members so as to provide a weather-tight installation. Sources of existing water penetration through prime openings shall be located and corrected before installation. Necessary repairs shall be accomplished at the building owner's full expense prior to installation of windows. (See IBC Section 1405.3 for details.)

4.6 Cut-Out Windows

Cut-out windows have nailing flanges installed on the sheathing or framing. The tops of cut-out windows shall have metal flashing inserted behind the existing siding material and over the head trim piece, unless the tops of the windows are protected by an overhang (see the "Exposed to the Elements" diagram that follows).

Head flashing shall extend beyond the front edge of the window frame or trim and slope downward and away from the building.

The sides of cut-out windows shall be flashed with 15-pound felt or an equivalent building paper.

The building paper shall be inserted underneath the existing siding and building paper and over the fins of the windows. The bottoms of cut-out windows shall be flashed with 15-pound felt or an equivalent building paper. The building paper shall be inserted underneath the existing siding and over existing building paper and under the bottom fins of the windows.

Add to exterior Trim and interior trim All filler and trim pieces must be caulked. The flashing shall tuck up behind the exterior siding at least 1 inch.

4.7 Finless windows

A finless window may be installed when glazing unit is removed and frame is collapsed for removal, a newly installed finless window unit will have metal or vinyl head flashing. The flashing shall tuck up behind the exterior siding at least 1 inch and extend beyond the window a minimum of 1inch on each side. Head flashing shall extend beyond the front edge of the window frame or trim and slope downward and away from the building.

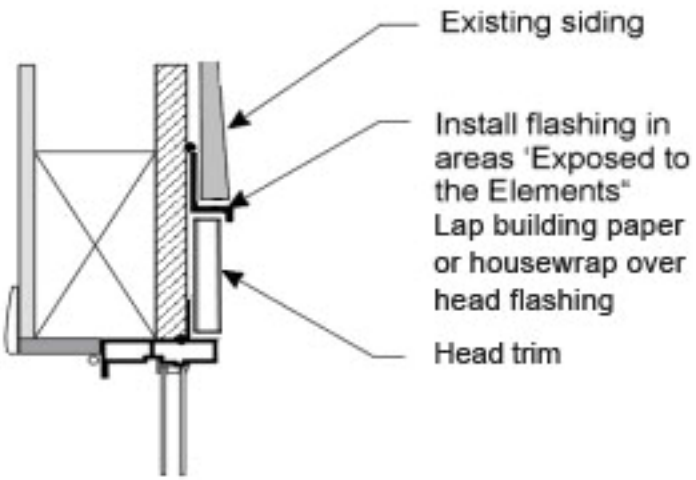

Illustration: Energy Trust of Oregon

4.8 Exposed to the Elements

To determine if a window is "exposed to the elements," use the "two-to-one ratio" system. See the following illustration:

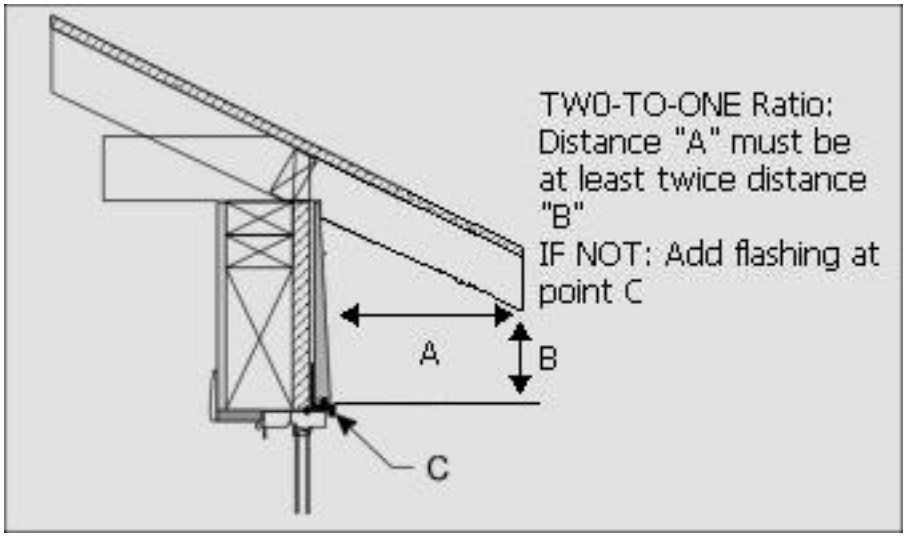

Illustration: Energy Trust of Oregon

Exception: **Mobile Homes**

a. Stucco bar, Z bar or Mobile flange style windows are allowable and may be surface mounted on exterior of siding using putty or butyl tape between flange and siding.

b. Rain cap/head flashing required, may surface mount using putty or butyl tape.

Section 5.0 Ductless-Split Heat Pump System Specifications

MF TOC

See Single Family Specification **Section 12,** ***Air Conditioning and Heating Systems***, **Section 12.6,** *Ductless Heat Pumps*

Section 6.0 Residential Heat Pump Water Heaters

Installed in Northern Climates

MF TOC

6.1 Scope (Version 3.0 Energy Star Specification)

6.1.1 Equipment Type

This specification covers residential, electric-fired, storage water heaters 40 gallons and larger with an integrated heat pump that provides heating capacity in addition to a traditional electric resistance element. These units are intended as "drop-in" replacements for existing or new electric water heaters and are configured to meet the space and installation requirements for such a replacement.

6.1.2 Climate

This specification is targeted at climates with 4,000 heating degree days or higher and average ambient temperatures below 60 degrees Fahrenheit. This equates roughly to locations in North America with latitudes above 40 degrees herein referred to as "Northern Tier" climates.

6.2 Requirements for All Units.

6.2.1 Energy Star

Units shall meet ENERGY STAR criteria including the following:

a. A minimum Energy Factor of 2.0.
b. A minimum first hour rating of 50 gallons
c. A warranty of at least 6 years
d. Compliance with UL 174 and UL 1995.

6.2.2 Additional First Hour Rating Requirement.

Units shall be capable of delivering the full, first hour rating of an equivalently sized electric tank operating with a conventional resistance element. Under no circumstances shall the unit deliver less hot water than a conventional electric resistance water heater of the same volume and standard electric resistance element size.

6.2.3 Condensate Management

Heat pump water heaters are capable of producing significant amounts of condensate (several pints per hour) that if not successfully removed can cause homeowners to think that their water heater is leaking. While condensate management is a standard

item for air-conditioning equipment, this is a new item for water heaters and will require appropriate attention from manufacturers and installers.

6.2.3.1 Acceptable Condensate Piping.

The unit shall include a minimum piping connection for condensate drainage of ••• inch (inside diameter) or greater. The manufacturer shall supply appropriate condensate piping specifications including piping diameter, length, allowable turns, and acceptable termination for gravity drains (e.g. minimum height between termination and connection to the unit) and for condensate pumping in locations such as basements where gravity drainage is not possible. Instructions for the installer shall highlight importance of correct condensate line installation practices to minimize potential water damage and customer problems.

6.2.3.2 Condensate Overflow Shut-off and Alarm.

Units shall include a safety switch to shut off compressor operation in the event of a blockage of the condensate removal system. In the event of compressor shut-off due to condensate drain failure, an audible and visible alarm shall be activated to signal the need for service.

6.2.3.3 Condensate Collection Pan and Drain Service.

The condensate collection pan and drain shall be designed to be self-cleaning without regular maintenance or interaction by the consumer. In the event of a blockage, the pan and drain shall be designed to allow the consumer using normal, household tools (e.g. wrench, screw driver) to be able to clear the drain and restore normal operation of the condensate line.

6.2.4 Air Filters: Routine Maintenance and Homeowner Notification.

Any air filters shall be either 1) permanent, washable media or 2) replaceable, standard furnace filters in shape and form that are obtainable at any home improvement store. The unit shall provide notification and alarm to the homeowner of appropriate need to change or service the filter in order to prevent compromise of performance of the heat pump from reduced air flow. Examples of methods to measure need for service include:

a. increased pressure drop across the filter,
b. standard run-time life for filters,
c. increased fan power consumption.

6.2.4.1 Warranty Coverage and Term

The unit shall carry a warranty meeting the ENERGY STAR criteria of a minimum of 6

years for parts as well as a minimum of 1 year for labor.

6.2.4.2 Contact Information

The unit shall include clear information on how to obtain warranty service, replacement filters or other maintenance items, and technical support via a toll-free phone number clearly marked on the exterior of the unit.

6.2.5 Compressor Shut-down and Notification

In the event of compressor shut down or failure, the unit shall provide notification to the customer that the heat-pump operation of the product has been disabled.

6.2.5.1 Serviceable Event

If the compressor shut down was due to a serviceable event, the unit shall display an appropriate signal to the customer to call for a service technician to restore the heat pump functionality of the unit.

6.2.5.2 Normal, Temporary Event

If the compressor is temporarily disabled due to specific operational controls (e.g. low intake temperature), the unit shall display to the customer that the heat pump is not currently operating but shall restore compressor operation as soon as conditions return to allowable control parameters (e.g. return to minimum intake temperature).

6.2.5.3 User Selected Override

If the compressor is temporarily disabled due to consumer override, the unit shall provide a maximum override period of 48 hours before resetting to normal operating parameters.

6.3 Technical Requirements by Application

The following technical requirements are applicable for specific applications as described below. Manufacturers shall clearly identify which models are qualified for which applications along with the appropriate accessory parts necessary to meet the requirements for the specific application.

6.3.1 Installation Inside Conditioned Space.

Units designated for installation inside conditioned, finished spaces shall include features and installation instructions that meet the requirements of this section:

6.3.1.1 Exhaust Ducting

In order to maximize occupant comfort and energy performance units designated for installation inside conditioned space shall be equipped with or have manufacturer supplied modifications to provide for ducting of the exhaust air leaving the unit directly to the exterior of the building using commonly available ducting and termination fittings used in residential applications. The water heater unit or manufacturer supplied modification must include all necessary flanges, collars, or other connections that are capable of directly connecting to a duct while still delivering the appropriate air-flow across the evaporator coil as specified in this section. Include appropriate controls and design to minimize the space heating impact of increased infiltration due to the exhaust operation of the HPWH during periods when the outdoor temperature drops below the exhaust temperature of the unit. Examples of such strategies include:

a. Installation of the HPWH in or ducting intake from a room where it substitutes for a standard exhaust device that would otherwise be deployed, e.g. a bathroom or utility room
b. Outdoor temperature sensor controls that reduce fan flow rate or shut down the heat pump operation below a specified ambient temperature.
c. Reduced fan flow rate whenever the heating system is in operation.

[**NOTE**: The exhaust ducting of interior air through the heat pump to the exterior is critical to minimize the penalty to space heating. Exhaust air operation reduces the space heating penalty by 50% by essentially recovering heat from air that would have exfiltrated the home through other leakage areas above the neutral pressure plane. For more information, see ASHRAE Handbook of Fundamentals on the interaction of air infiltration and mechanical exhaust ventilation.]

6.3.1.2 Minimum Flow Rate/Pressure Drop

The unit must be capable of delivering its rated air-flow across the evaporator including a minimum exhaust duct static pressure drop of 0.25 inch water gauge.

6.3.1.3 Noise

Units shall have a sound rating not to exceed 50 decibels (A-weighted).

6.3.2 Unconditioned or Semi-conditioned spaces.

The ENERGY STAR rating for water heaters is based on a test procedure that maintains an ambient temperature of 67.5 degrees Fahrenheit. In northern climates where average ambient temperatures fall below this value, units installed outside the conditioned space will not necessarily deliver the 50% energy savings implied by the EF 2.0 rating. In order to deliver annual average energy savings performance comparable to the implied savings of 50%, units designed for installation in unconditioned (garages, crawlspaces, attics, etc.) or semi-conditioned (basements, furnace rooms, etc.) space shall meet the following requirements:

6.3.2.1 Annual Efficiency Performance

Units designed for installation in unconditioned or semi-conditioned spaces shall include strategies to maintain annual overall efficiency equivalent to an Energy Factor 2.0 in an interior installation. Examples of such strategies include:

a. Full compressor operation with intake temperatures to at least 40 degrees F and a coefficient of performance of 2.0 or better at 40 degrees F.
b. Ducting of HPWH intake from conditioned space. This can be accomplished by using the HPWH to serve an existing exhaust need such as a bathroom exhaust fan or utility room or as a whole-house ventilation system in some central location.

In all cases, the electric resistance element shall be controlled to provide supplemental water heating capacity in addition to heating provided by the compressor as necessary to meet water heating demand.

6.3.2.2 Freeze Protection

Units shall include controls and features that allow the unit to operate at an ambient temperature of 28 degrees Fahrenheit for a minimum of 24 hours without freezing or rupturing of any water-related connections or components including but not limited to condensate lines, heat exchangers, pumps or other heat pump components apart from the standard plumbing connections required for a traditional electric resistance water heater.

6.3.2.3 Fan Flow and Ducting

HPWH shall include provisions for ducting cold exhaust air directly to the exterior. Ducting to the exterior is recommended for all spaces without significant sources of waste heat or tempering; e.g. garages with no furnace or with insulated ductwork. Ducting to the exterior is also recommended in all cases where a HPWH is located in a space with 3,000 cubic feet of volume or less. Exhaust duct and fan flow shall meet the requirements of section 4.1.2 Minimum Flow Rate/Pressure Drop.

6.3.2.4 Noise

Units installed in semi-conditioned spaces shall have a sound rating not to exceed 60 decibels (A-weighted).

Definitions:

Dwelling Unit
A house, including a stationary mobile home; an apartment; or a room in a group residential facility, including a shelter, group home, or transitional facility.

Multi-Family Dwelling
A building with two or more attached dwelling units.

Type 1: 2-4 units

Type 2: Town House, Row House, Garden Apartments
3 stories or less (includes basement level) and 5 units or more
Individually metered (heat/light) - Heating fuel and electricity are individually metered and paid for directly by client.
Each unit has 2 or 3 walls exposed to the exterior
Each unit has at least one exit that leads directly outside

Type 3: Common Space or Central Corridor Building
3 stories or less (includes basement level) and 5 units or more
Individually metered or commonly metered (heat/light)
Each unit shares a common hallway
Each unit has 1-2 walls exposed to the exterior

Type 4: Shelters and Rooming Houses
A dwelling unit or units whose principal purpose is to house on a temporary basis individuals who may or may not be related to one another and who are not living in nursing homes, prisons, or similar institutional care facilities

Type 5: High Rise
4 stories or more
Individually metered or commonly metered (heat/light)
Each unit shares a common hallway
Each unit has 1-2 walls exposed to the exterior

Single-Family Dwelling
A structure containing no more than one dwelling unit.

Multi-Family Project
A building with 5 or more units, may be a single building or a complex of buildings

Multi-Family Building
A building of Type 2-5

Multi-Family Complex
Multiple Buildings (SFD, Type 1-5) on one contiguous property

Weatherization Program

Property Owner/Agency Agreement for Multi-Family Buildings

I _____, certify that I am the owner/authorized agent for the property located at:
(Owner/Authorized Agent)

_____
(Property Name and Address)

I authorize the

_____
(Agency)
to make weatherization repairs and improvements as determined by an energy audit of the building. The owner may elect to make a donation or participate in the project cost by making a cash contribution in an amount to be determined prior to initiating the improvements.

I hereby release and pledge to hold harmless the agency, and its staff, from any liability in connection with the weatherization work.

In consideration of the weatherization work to be performed, the parties agree:

1. "Rent" is defined as the tenant monthly payment to the owner (non-subsidized housing) or the Contract rent (subsidized housing).
2. That the rent shall not be raised at any time because of any increase in the value of the rental unit(s) due solely to the weatherization assistance. (Valid and allowable reasons for rent increase include but are not limited to: increases in property taxes, property improvements other than weatherization measures etc.)
3. That the owner/agent will submit a current rent schedule prior to completion of weatherization work upon request of the agency.
4. That during a period extending through one (1) year beginning on the date of agency certified completion of weatherization work, the amount of rent, will not be raised.
5. The provisions of paragraph 4 will be waived by the Agency in writing if, and only if, the premises are leased under a state or federal rent subsidy program which restricts the amount of rent the Owner may charge, in which case, the actual contract rent charged by the owner shall conform to the standards of the rent subsidy program. The following will meet the intent and requirements of this paragraph allowing the before mentioned waiver based on the definition of a qualifying state or federal rent subsidy program as described below:

   All H.U.D or U.S.D.A. funded projects, including H.U.D.'s Home Program that are designated as project-based rent subsidy programs; providing the subsidy, not to the low-income person, but to the building or project, based on a specific number of units that must be rented to low-income individuals, as per the building or project's contract, mortgage, loan document, or deed or the project. The duration or length of the building/project contract, mortgage, etc. must be greater than a 10 year period, and shall be current for at least 1 year after the completion on the weatherization work proposed.

Qualifying Criteria:

Washington State's Weatherization Program Policy Section 1.5 –A.1.b, Qualifying Multi-Unit Residences, shall be followed: that low-income occupancy is at least 66%, or 50% for four units or less. Documentation shall clearly state that a project, identified by name, address and/or county record will serve sufficient number of low-income individuals to meet the requirements in Section 1.5, and that rents will not exceed the lesser of the Fair Market Rent (FMR) or 30% of the adjusted income of a family whose income is at or below 50% of the area median income for Metropolitan Statistical Areas (MSA) or Primarily Metropolitan Statistical Areas (PMSA).

6. That from the effective date of this agreement, and during a period extending through three (3) years following the date of completion of the weatherization work performed, the owner will not evict, terminate or institute any court action for possession against any tenant or successive tenant, except for good cause as indicated in a properly executed lease, or rental agreement, pursuant to the *Unlawful Detainer Statute*, RCW 59.12.030(1-7) (e.g. but not limited to: exceeds term of lease, nonpayment of rent, committing waste, maintaining a nuisance, gang & drug activity or use, etc.) **(http://apps.leg.wa.gov/RCW)**

7. That in the event the owner/agent has been found to have violated the terms of this agreement and is notified by the agency, the owner/agent shall in a commercially reasonable period of time either cure the violation or repay the agency the full value of materials and labor as documented by agency work records a copy of which shall be provided to owner.

8. That in the event the owner sells the premises to an entity not managed or controlled by the owner within three (3) years after the weatherization work is completed, the owner will comply with one of the two following conditions:

   a. The owner shall repay the agency at the date of sale an amount equal to the percentage of the three (3) year/month period remaining, times the full value of the material and labor as documented by the agency work records, except if sold to low-income tenants.

   b. The owner shall obtain in writing prior to the sale the purchaser's agreement to assume the owner's obligations under this agreement.

   The owner shall immediately upon entering into a non-contingent agreement of the sale of the premises, so inform both the agency and the tenants, by written notice. In the event the owner sells the premises to an entity managed or controlled by the owner, the terms of this agreement will continue to be met.

9. That the present tenants, or any successor tenants during the term of this agreement, are the intended beneficiaries of this agreement and shall have the right of enforcement.

10. That for the breach of this agreement, damages, where not otherwise specified, may be awarded in accordance with applicable law. The prevailing party in any suit to enforce this agreement shall be entitled to recover his costs and reasonable attorney's fee.

11. That the agency shall provide a copy of the agreement and synopsis explaining its terms to the tenants. That the owner shall provide a synopsis explaining the terms of this agreement to subsequent tenants of the above rental unit(s), or to the new and subsequent occupants of rental units vacant on the effective date of this agreement.

12. That the terms of the agreement shall apply to any other lease or agreement between the Owner and the tenants, and between the owner and any successor tenants during the terms of the agreement, and if there is any conflict between the provisions of the agreement and the provisions of such other lease or agreement, the provisions of this agreement shall govern. With the

exception of the provisions outlined above, all provisions of the *Washington State Landlord/Tenant Act* (RCW 59.18) **(http://apps.leg.wa.gob/RCW)**, the *Washington Sate Manufactured/Mobile Home Landlord/Tenant Act* (RCW 59.20) **(http://apps.leg.wa.gov/RCW),** shall apply to the owner(s) and tenant(s).

13. That the provisions of this agreement are severable. If any provision of this agreement is found invalid, such finding shall not affect the validity of this agreement as a whole, or any part or provision hereof other than the provision so found to be invalid.

14. Failure of the agency to enforce the agreement upon breach by the owner shall not be construed as a waiver of the agency's right to enforce the agreement.

15. That the owner/agent hereby grants permission for agency staff to communicate with utilities to gain access to this multi-family project account's information regarding usage, status, disconnection and arrearages. The owner/agent agrees to let the utility company release this information directly to the agency. This information will remain confidential.

Signed: _____ Date:_____
(Owner/Authorized Agent)
Address: _____ Phone: _____

Approved By: _____ Date: _____
(Agency Representative)

Introduction to Multifamily

Weatherization Energy Auditor Multifamily

Key Terminology

Community Action Partnerships (CAPs)

Domestic Hot Water (DHW)

Energy Audit using the Queens Information Package (EA-QUIP)

Energy burden

Energy Information Administration (EIA)

Grantee

Heating, Ventilating, and Air Conditioning (HVAC)

Health and Safety (H&S)

Incidental repairs

Indoor Air Quality (IAQ)

Lead Safe Weatherization (LSW)

National Energy Audit Tool (NEAT)

Public Housing Authorities (PHAs)

Savings-to-Investment Ratio (SIR)

Section 8

Subgrantee

Targeted Retrofit Energy Analysis Tool (TREAT)

U.S. Department of Agriculture (USDA)

U.S. Department of Energy (DOE)

U.S. Department of Housing and Urban Development (HUD)

Weatherization Assistance Program (WAP)

Section Transition

Learning Objectives (Slide #3)

By attending this session, participants will understand:

- The applicability of single family priority list to small multifamily buildings.
- What multifamily buildings qualify for DOE Weatherization funding.
- Some general information and characteristics of multifamily buildings.
- How a building qualifies for Weatherization funding.
- The relationship of the client, building owner and subgrantee.
- How the client benefits from Weatherization improvements.

The Big Picture (Slide #4)

It is important to remember that Weatherization in smaller (3-stories and less) multifamily buildings is often very similar to single family.

- This is often true for buildings with 25 units or fewer, individually heated/cooled. In such multifamily buildings single family priority lists often apply.
- One of the main differences between single family and multifamily buildings is that multifamily buildings require more up front preparation:
  - Coordination with building owner/manager.
  - Fuel consumption data often more important.

I will repeat this for emphasis: It is important to remember that Weatherization in smaller (3-stories and less) multifamily buildings are often very similar to single family.

The Big Picture – Small MF Priority List (Slide #5)

The single family priority list is often applicable – or nearly applicable for smaller (3-stories and less) multifamily buildings.

Here is a typical single family priority list:

- Air Sealing/General Heat Waste.
- Attic & Floor Insulation.
- Dense-Pack Sidewalls.
- Solar Window Screens.
- Smart Thermostats.
- CFLs.
- Seal and Insulate Ducts.
- Refrigerator Replacement.
- HVAC.

The measures applicable for small multifamily buildings would be almost identical in many cases:

- Air Sealing/General Heat Waste.
- Attic ~~& Floor~~ Insulation, but even floor insulation might be applicable if the building was not built on a slab.
- ~~Dense-Pack Sidewalls~~, but again, for a small, wood-framed building, this measure might be applicable.
- Solar Window Screens.
- Smart Thermostats.
- CFLs.
- Seal & Insulate Ducts.
- Refrigerator Replacement.
- HVAC.

Mission (Slide #6)

The legislative mission of the ***Weatherization Assistance Program (WAP)*** is:

- To reduce energy costs for low-income families, particularly for the elderly, people with disabilities, and children, while ensuring their ***health and safety (H&S)***.

The purpose of the program was changed in the law to include health and safety in the enabling legislation of 1990.

Organization (Slide #7)

Illustrates the flow of dollars through the program:

- The Federal government distributes funds to the ***U.S. Department of Energy (DOE)***, where the program is managed by the Project Management Center (PMC).
- Funds pass to each of the ***Grantees***: the 50 State Offices, the District of Columbia, Native American Tribal Organizations, and the 5 Territories.
- Grantees distribute funds to over 900 local agencies nationwide according to approved budgets.
- The money is used to install cost-effective energy-saving measures in low-income households.

Lyndon Johnson's "War on Poverty" laid the groundwork for the Weatherization Assistance Program (WAP) by creating the infrastructure of ***Community Action Programs (CAPs)*** that now exist in every State. These CAPs often act as subgrantees. The War on Poverty included Head Start, the Low-Income Home Energy Assistance Program (LIHEAP), and after-school programs for children so parents could be part of the work force.

CAPs have the right of first refusal to be a local weatherization agency. Only non-profits and local government agencies are also allowed to act as ***subgrantees***.

Low-Income Multifamily Households (Slide #8)

Facts[4]:

- More than one-quarter of U.S. households are in multifamily buildings.
- More than 11 million multifamily households have annual incomes that qualify for Weatherization assistance.
- The average energy expenditure in multifamily low-income households is $1,247 annually.
- According to DOE's ***Energy Information Administration (EIA)***, low-income households spend 14.4% of their annual income on energy, while other households only spend 3.3%.

These statistics highlight not only the number of multifamily households that are eligible for WAP funding, but also the importance of reducing the ***energy burden*** on our clients.

- Energy burden refers to the percentage of a household's income that must be used for energy bills. The energy burden for low-income households is more than four times that of other households.

Affordable Housing (Slide #9)

- In public housing, buildings are owned by public/private ***Public Housing Authorities (PHAs)*** (also known as Public Housing Agencies) that are at least partially supported by the Federal government.
- PHA housing (administered by the ***U.S. Department of Housing and Urban Development (HUD)***) includes approximately 1.3 million households. The Weatherization subgrantees access this housing through PHAs.
- Other affordable housing falls under the following public programs. The buildings are usually privately owned. Rent and, when available, utility supplements are usually provided to residents through vouchers. Subgrantees access this housing through private landlords.
  - ***Section 8*** – 2,700,000 units nationwide.
  - Section 202 (elderly) – 270,000 units nationwide.
  - Section 811 (persons with disabilities) – 18,000 units nationwide.
  - Section 515 (Rural Housing Rental Assistance) – 410,000 units nationwide.
  - Rent Supplement (often State-owned in MA, CT, and NY) – 21,000 units[5] nationwide.

---

[4] This data, provided by Joel Eisenberg, Oak Ridge National Laboratory, and Meg Power, Economic Opportunity Studies, is based on raw data from the Residential Energy Consumption survey conducted by EIA. Source 1: ORNL/CON-493, ORNL/CON-484, EIA February 2008 Short-Term Energy Outlook Source 2: ORNL/TM-2010/66, EIA February 2010 Short Term Energy Outlook

[5] "Meeting Our Nation's Housing Challenges," Millennium Housing Commission, 2002.

Utility Expenditures in Affordable Housing (Slide #10)

The two pie charts on this slide show the utility splits – electricity, natural gas, water, fuel oil and other utilities (such as propane, firewood, coal) – common in affordable, multifamily housing.

- Opening up affordable multifamily housing to WAP assistance brings in a large, underserved group of low- to moderate-income residents.
- There are several types of affordable housing: Federal, State, and local.
- Residents of public housing account for a large amount of energy consumption. Public housing alone accounts for $1.5 billion/year in utility costs.
- Utility expenses for Section 8 housing are another $2.5 billion/year.
- It is important that WAP financial benefits go to the residents and not the building owner. More on that later.

Cost-Effectiveness Requirements (Slide #11)

Two key principles guide the installation of measures: cost-effectiveness and the availability of health and safety funds. The requirements are almost the same as for single family homes.

- Each individual weatherization measure and each package of weatherization materials and measures installed in an eligible dwelling unit must be cost-effective *on a building-wide basis*! For some units, the measures might not achieve a high enough ***savings-to-investment ratio (SIR)***, but they will on average.
- SIR must be ≥1.
- ***Incidental repair*** costs must be included in the SIR of the entire package of measures.
- States may include additional, related costs.

Health and Safety (Slide #12)

- Energy-related health and safety work is not included in the SIR.
  - There is no federally mandated upper limit for H&S funds. Each State designates this in its State plan.
  - Historically, States have set their upper limit around 6-7%. That number has gone up with the increase in the amount of ***lead safe weatherization (LSW)*** and furnace replacements, which often involve asbestos.
- Higher requests for H&S can encourage increased scrutiny of the State plan.

Lead and Asbestos (Slide #13)

- Most affordable housing is older than 1978, which means that lead and asbestos can be a problem. For guidance on lead and asbestos, see Weatherization Program Notices 02-5, 02-6, 08-6 and 09-6. State-specific guidelines can be found in the State plan and/or policy and procedures manual.
- In many cases, the lead has been abated on federally subsidized properties, since it is a HUD requirement and HUD provided funds to do the abatement or encapsulation.
- Asbestos has also been abated in many cases, but is sometimes still a problem in boiler rooms.
- *Do not assume lead or asbestos abatement work was done. Look for documentation from the building owner/manager.*

Why Do an Energy Audit? (Slide #14)

Weatherization done right delivers four basic benefits:

- Saves energy and money for the client.
- Improves ***indoor air quality (IAQ).***
- Promotes building durability by avoiding moisture problems.
- Increases comfort.

The only group that does not benefit from weatherization is energy vendors (except in the few enlightened states where public utilities' energy sales are not linked to profits. This encourages the utility to promote energy efficiency).

Why Weatherize a Multifamily Building? (Slide #15)

- More bang for the buck: Dollars spent per residence go farther in a multifamily building than in a single family home.
- Meeting your production goals: If your agency has a goal to weatherize a certain number of residences, it's easier to meet that goal by concentrating on multifamily buildings.
- Bigger measures with high SIR: Replacement or major repairs to central ***heating, ventilating, and air conditioning (HVAC)*** systems and central hot water have high SIRs.
- Stable jobsite for contractors: Larger projects with more housing units provide longer site duration and continuous work for installers.
- Opportunities for bulk discounts on products.

Hire residents, which will provide local jobs and job training! This will also teach other residents about energy efficiency. Often, residents or local groups can be used to install screw-in compact fluorescent lights, low-flow showerheads and faucet aerators.

Eligible Multifamily Buildings (Slide #16)

Which multifamily buildings are eligible?

Because multifamily buildings usually house families of various income levels, the question isn't always easy to answer.

- Fortunately, DOE issued Weatherization Program Notice (WPN) 10-15 on March 2, 2010, to help identify HUD and ***U.S. Department of Agriculture (USDA)*** buildings eligible for WAP funding.
  - The household income requirement for WAP eligibility is at or below 200% of poverty level. This is the same for single family and multifamily.
  - At least 66% of households in a multifamily building must meet Weatherization income requirements. So we can weatherize a 100-unit building if at least 66 of the units are occupied by income-eligible clients.
  - At least 50% of households must meet Weatherization income requirements in duplexes and 4-unit buildings.

How much Weatherization funding is available for each building?

- (average Weatherization $/unit) x (number of units in building) x (% of units in building eligible for funding)
  - For example: 75% of units are eligible in an 80-unit building where average funding/unit is $6,200. The total available for Weatherization upgrades to the building is $6,200 x 80 x 0.75 = $372,000.

Eligible Multifamily Buildings (Slide #17)

WPN 10-15 describes which buildings meet eligibility levels without further investigation by the subgrantee.

For a building to be eligible, the building owner also must agree not to raise the rent for a reasonable period of time – usually three years – after weatherization work has been completed (as required under 10 CFR 440.22(b)(3)(i)).

- In some buildings (Lists 1 and 3 in WPN 10-15), the building owner has already agreed that eligible dwelling units will not be subject to rent increases as a result of Weatherization improvements. The auditor does not need to coordinate an agreement.
- In other buildings (List 2 in WPN 10-15), eligible dwelling units <u>could</u> be subject to rent increases as a result of Weatherization improvements, so the building owner/manager must <u>sign off</u> that rents will not increase. In this case, the subgrantee must ensure that there is agreement between the building owner and the subgrantee that the rent will not increase as a result of the WAP improvements.

Eligible Multifamily: WPN 10-15, List 1 (Slide #18)

What do the tables of eligible properties from WPN 10-15 mean?

There are three lists in WPN 10-15. Each list is an Excel file. Each of the Excel files contains at least one and up to three worksheets. The information in List 1 is for buildings in which the rent is controlled per WAP guidelines, so the owner/manager cannot raise the rent after the weatherization work, which satisfies Program requirements.

- The first worksheet in List 1 shows only the specific buildings in public housing that are 100% income-eligible. The subgrantee does not have to do any further work to determine income eligibility for these buildings.
- For purposes of showing that the property is eligible, include a copy of the list with the property in question highlighted in the overall file for the project. If the client files for each unit may be separated from the bunch, copy and paste that property's identification from the List onto the income eligibility page to demonstrate that the residents qualify.
- To gather demographics, which many grantees require, the subgrantee can obtain the demographic breakdown from the building owner. For buildings pre-qualified on these Lists the grantee does not have to gather individual statistics from each residence.

Eligible Multifamily: WPN 10-15, List 1 (Slide #19)

- The second worksheet in List 1 shows the public housing buildings in which at least 66% of the residences are income eligible. Subgrantee can use the equivalent funds (e.g., 66% of $6,500/unit x 100 units = $429,000) to weatherize the entire building. However, if the subgrantee feels that more than 66% of the units are income-eligible, the subgrantee can do the necessary eligibility determination and then can use the total funding that would be available for that number of units (e.g., 73% of $6,500/unit x 100 units = $474,5000.
- Some things to consider before pursuing eligibility determination on these properties:
  - Eligibility must be determined for the entire building, you do not start at 66% and go from there.
  - Is the additional funding worth the effort of determining eligibility?
  - Is that additional funding even needed to complete the WAP improvements?

Eligible Multifamily: WPN 10-15, List 1 (Slide #20)

- The third worksheet in List 1 shows the specific buildings in Section 8 housing that are at least 66% income-eligible. This is a different type of subsidized housing, but the eligibility standards are the same as described in the previous slide.
- If the subgrantee feels that more than 66% of the units are income-eligible, subgrantee can do the necessary eligibility determination and then can use the total funding that would be available for that number of units.

Eligible Multifamily: WPN 10-15, List 2 (Slide #21)

- List #2 shows the specific buildings in Section 8 housing that are at least 66% income-eligible but the rent is NOT frozen. The subgrantee must include language in the contract guaranteeing that the building owner/manager WOULD NOT raise rents as a result of the WAP work. Also, if the subgrantee feels that more than 66% of the units are income-eligible, subgrantee can do the necessary eligibility determination and then can use the total funding that would be available for that number of units.

Eligible Multifamily: WPN 10-15, List 3 (Slide #22)

- Properties listed in this spreadsheet, list #3, have the same eligibility (100% of units are income-eligible) and rent controls (rent cannot be raised as a result of WAP improvements) as the first worksheet in List 1. The only difference is that this is USDA housing instead of HUD housing.

Multifamily Client (Slide #23)

- Who is the client? This can get complicated with a multifamily residence.
  - The short answer is that there are *many clients*, because all the income-eligible households in the building are your clients. (Income-eligible households are at 200% of the poverty level or below.)
- You also need to know who pays the utility bill:
  - Utility bills are very helpful in some audits, especially for larger (25+ unit) buildings and buildings with shared HVAC.
  - If the clients pay the bills, then the benefits of the WAP improvements automatically go to the clients. You'll need to go to the clients (all of them) to obtain copies or to sign a waiver allowing you to obtain copies from the utility provider.
  - If the building owner pays the bills, you will need to go to the owner to get him/her to agree in writing that the residents will benefit in some quantifiable way (more on this point later).
- This gets more complicated depending on how the building is metered.
  - Is the system hybrid, where the gas is master metered but electricity is individually metered, or vice versa?
  - Are there master metered common areas and individually metered dwelling units?
  - If the system is master metered, you need to go to the building owner. If it is individually metered, you need to go to the clients. Or you may need to go to both.

Collecting Utility Information (Slide #24)

Utility bills are required if you are doing a multifamily audit ***(Targeted Retrofit Energy Analysis Tool (TREAT)*** or ***Energy Audit using the Queens Information Package (EA-QUIP))*** – more on these audit tools later), because the bills are very important in "calibrating" the model.

In resident-paid buildings, the tenant must sign a waiver before the auditor can get the bills.

- In low-income housing, the tenants sometimes have a combative relationship with the owner/manager and do not want to share their personal information, no matter the reason.
  - When residents pay their own utilities, it is usually very difficult to obtain more than 50% of the bills for a building.
  - If you can get a representative sampling of bills (considering size of apartment, number of bedrooms, and number of levels), you might be able to get a good estimate of utility use with as few as 10-25% of the bills.

Multifamily Client (Slide #25)

Who is the contact? This also gets complicated for multifamily buildings.

- The building owner/manager is the primary contact and must be a partner in the WAP project. *The building owner/manager's participation is vital.*
  - WAP services are coordinated and delivered to residents though the building owner/manager.
  - The building owner/manager applies for WAP services.
  - The building owner can provide data on income qualification for all of the tenants.
- Resident groups may also play a role.
  - A residents' group might encourage or persuade the building owner/manager to apply.
  - A residents' group might participate in the application process.

Contract with Building Owner (Slide #26)

A contract with the building owner or building manager is mandatory. Standardized contracts are available. In addition to the usual agreement terms and conditions, scope of work and budget, the contract must include the following (at least as an attachment):

- The Owner/Operator's contribution to the project.
- The Owner/Operator's plan to ensure that WAP benefits go to the eligible residents (WPN 10-15A).

WPN 10-15A – Benefits to Clients (Slide #27)

Benefits of WAP in multifamily building rental units must accrue primarily to the low-income tenants residing there. This can be complicated when the residents' utility bills are paid for by the building owner and included in the rent.

When a tenant does not pay for energy directly, a combination of several categories of benefits could be used to demonstrate that the benefits of the weatherization accrue primarily to the tenant. Benefits that could be combined, include, but are not limited to the following:

- Longer term preservation of the property as affordable housing.
- Continuation of protection against rent increases beyond that required under the WAP regulations (10 CFR 440.22(b)(3)(ii)).
- Investment of the energy savings in facilities or services that offer measurable direct benefits to tenants, i.e., creating community rooms, improvements to common areas, roof repairs, etc.
- Investment of the energy savings from the weatherization work in specific health and safety improvements with measurable benefits to tenants, i.e., lead or asbestos remediation, improved pest control, etc.
- Improvements to heat and hot water distribution, and ventilation, to improve the comfort of residents.
- Establishment of a shared savings programs.

Multifamily Client (Slide #28)

Pictured: a solar photovoltaic (PV) collector and a drainback solar hot water system.

Some building owners might take the opportunity to make improvements unrelated to WAP while construction is going on.

- The building owner might want to invest additional funding beyond WAP-eligible improvements.
- In the interest of applying "house as a system" thinking to multifamily buildings, the subgrantee and building owner must ensure that non-WAP-eligible residences have the same or similar WAP upgrades as eligible residences. This means if the attic is insulated, the entire attic is insulated, even those sections over non-eligible dwellings.
    - In the case of base load measures, just as the weatherization upgrades must be shown to directly benefit the low-income residents, appliance replacements in non-eligible dwellings should be limited to those that convey with the rental unit. In other words, if the resident will take the appliance with them upon move-out, it might not be prudent to replace refrigerators in the non-eligible units.

Q: What non-WAP improvements might a building owner install during WAP upgrades without any additional inconvenience to residents?

A: Solar electricity or hot water collectors on roof, new energy- and water-saving clothes washers, new outdoor lighting with photoswitches, or new windows. (New windows usually don't meet the SIR required by WAP.)

WPN 10-17 – Buy-downs (Slide #29)

If the owner or subgrantee wishes to install improvements when the SIR < 1, the measure can be "bought down" so the DOE contribution for that measure has an SIR ≥ 1.

- Furnace replacements, fenestration, etc.
- Health & Safety improvements beyond budget.

The buy-downs must be with non-Federal funds. The total costs of improvement is discounted with non-Federal sources, e.g.

- Landlord contributions.
- Utility funds.
- Donations.
- State funds.

Do not leapfrog cost-effective measures! WAP funds cannot be used to install a measure with a lower pre-buy-down SIR if that will preclude installing measures with a higher SIR and no buy-down.

The total package must still be cost effective overall. The total package must have an SIR ≥ 1 with buy-downs excluded.

Multifamily Client – Responsibility (Slide #30)

- The auditor is responsible for selecting WAP improvements based on the energy audit, but the building owner/manager must be part of the decision-making process.
- The building owner's designee is responsible for jobsite coordination. WAP auditors and implementers must coordinate with the owner's representative and resident groups.

What sort of warning should you give residents before inspecting their units?

- Ask your building contact (your liaison with the owner) to make an appointment with the residents at least one day in advance, but most properties have a defined policy. If there are specific units you want to inspect, make appointments with those renters up to a week in advance to ensure those units are available for inspection so you don't have to make a special trip later. Call to remind them the day before. Many properties will require an escort. Others won't allow access without the tenant being home.

Multifamily vs. Single Family Audit #1 (Slide #31)

How is the multifamily audit different?

- Multiple parties are involved:
  - Service provider (subgrantee).
  - Building owner/manager.
  - Maintenance department.
  - Residents.
- Every group or individual has its own priorities/interests/proclivities/problems…whatever!

Multifamily vs. Single Family Audit #2 (Slide #32)

Fuel consumption:

- Must collect information from all sources – preferably monthly utility consumption for at least 12 continuous months.
  - This is difficult for individually metered units.
  - Some units might use supplementary space heaters.
  - Common areas are probably metered differently than residences.
  - Some buildings might have fuel switching (gas or oil).

Multifamily vs. Single Family Audit #3 (Slide #33)

Building analysis:

- Often (usually) based on averages.
  - Finding specific control settings is difficult.
  - Settings vary by residence and residence location (lower vs. upper story).
- Try satisfying temperature requirements of all residents – please!
  - Audit software tools show savings with lower temperature setpoints, but how do you achieve those setpoints in many units at once?
    - Present data showing the variation across multiple apartments.
    - The analysis can be done for average conditions or for single apartments.
- Should you do a blower door test?
  - Sometimes, but use varies. A blower door isn't always used on large multifamily buildings.
  - When the blower door is used for multifamily buildings, it is usually not used on every unit (more on this in later modules).

Multifamily vs. Single Family Audit #4 (Slide #34)

Which audit tool would you use to model a multifamily building?

- The audit tool depends on many things but primarily building size:
  - 2-5 units: ***National Energy Audit Tool (NEAT)***.
  - 5-25 units individually heated/cooled: NEAT, RemDesign.
  - 5-25 units with shared heating/cooling: EA-QUIP, TREAT.
  - 25+ units: Approved multifamily tool: EA-QUIP, TREAT.

Applicability In Multifamily (Slide #35)

When do you use blower door testing? Usually in the following low rise (three stories or fewer) buildings:

- Units with doors to the outside (garden apartments).
- Buildings with 25 units or fewer.

Multifamily vs. Single Family Audit #5 (Slide #36)

Chart shows, based on various building sizes:

- Whether a single family priority list might be applicable.
- What type of audit is required?
- Whether blower door testing is required.
- Whether utility consumption data is necessary.

Quiz students on different types of buildings and the requirements, and discuss why those requirements exist for each situation.

Isolate Each Residence (Slide #37)

Best scenario – each apartment is isolated from adjacent apartments:

- Easier for residents to control their own climate.
- Easier to size HVAC needs.
- Minimize noise and smells from adjacent apartments.

Blower Door Testing in High-Rise? (Slide #38)

WAP does not require high rise residential buildings to be blower door tested. Prescriptive air sealing is common in high-rise buildings in lieu of blower door testing:

- Seal holes in building's exterior. Weatherstrip window/door frames.
- Replace inoperable or malfunctioning windows and doors as necessary.
- Caulk window frames and repair window balances.
- Install or replace door sweeps and install self-closing door devices.
- Seal room AC sleeves, insulate and install covers.
- Seal garbage chutes, ventilation shafts, plumbing and HVAC piping/ducts.
- Isolate stairwells, basement and mechanical rooms.
- Seal the top and bottom of building.
- Air seal and insulate the roof cavity.
- Repair roof leaks and flashing.
- Correct roof drainage and resurface as necessary.

Airflow in a Building (Slide #39)

Take a relative approach when evaluating a unit's ventilation and airflow without blower door testing. Note the following:

- Take into account the location of the apartment (end unit vs. middle unit, upper vs. lower story vs. top story vs. bottom story).
- Visual cues during inspection – obvious bypasses on non-operational vent fans.
- Client feedback – is it drafty? Cold? Hot?
- Mechanical equipment & air circulation – obvious bypasses or non-operational vent fans.
- Ventilation – Does system exist? How well does it work? Does client have specific issues? Is there mold? Flaking paint? Leaking windows?
- Combustion Appliance Testing – Every unit.
    - Do pre-weatherization testing during initial walk-through audit, but you won't walk through every unit.
    - Do remaining units when weatherization modifications begin in those units.

Multifamily Audit Scope #1 (Slide #40)

- Field meeting – Occurs *before* the inspection meeting with *at least the following attendees*:
  - Provider (subgrantee).
  - Building owner.
  - Building management company.
  - Superintendent.
- Outdoor inspection – Includes building measurements and assessment: evaluate walls, windows and exterior doors, outdoor lighting, foundation and the roof.
- Indoor inspection – Includes common areas, basements, HVAC systems, ***domestic hot water (DHW)*** systems, mechanical and ventilation systems.
- Apartment inspection – Includes a description of the unit, energy usage, health and safety, envelope, in-unit HVAC and DHW, wiring and gas/oil pipes.

Multifamily Audit Scope #2 (Slide #41)

- Audit calculations – Include fuel consumption (corrected) and monthly energy costs.
- Heat load calculations – Calculate heat load based on existing annual and monthly theoretical energy consumption.
- Building modeling – Compare actual to theoretical energy consumption.
- Review list of recommended retrofits – Are they reasonable? If not, re-run the model with those measures turned off.
- Projected energy use and cost – Estimate monthly fuel consumption with recommended scope of work.
- Evaluate other opportunities for H&S, fuel switching, sub-metering.

And of course, provide a full report at the end.

Using Audit Tools (Slide #42)

Audit software tools should be used by people who know what they are doing. They should know how to:

- Define base loads.
- Understand how equipment is actually used.
- Properly define parameters & characteristics of various building elements.
- Properly define time of usage.
- Understand and properly interpret results.

Audit Tool Inputs (Slide #43)

Most audit tool inputs come from data you collected during the building assessment:

- Building orientation, size and configuration.
- Envelope and orientation.
- HVAC – Individual systems, common systems, hybrids?
- DHW - Individual systems, common systems, served by central furnace, hybrids?
- Actual utility consumption profile.
- Climate – corrected for time period of utility consumption profile.
- Lighting, appliances, electronics, other plug loads.
- Residential unit characteristics, including building leakage.

Approved Wx Audit Software Tools (Slide #44)

Slide shows contacts for EA-QUIP, TREAT, NEAT and REM/Design.

Wx Audit Software - Summary (Slide #45)

Slide shows initial cost, yearly fee (if applicable) and available training and training fees for multifamily software. Software decisions are made at the State or local level. Consider the options, and what will work best for your program.

Communication 101 (Slide #46)

Communication can be even more important with multifamily clients because they often have a varied mixture of families and cultures. Be careful about your tone of voice, facial expression, and body language, as they express feelings and attitudes much more than words:

- Words – 7%
- Tone – 38%
- Body language – 55%

Actions speak louder than words.

Respect (Slide #47)

These are the clients' homes and the owners' businesses. Be mindful of:

- Pride of ownership – Show respect for the property. It is probably an important part of the building owners' investment portfolio and they probably want their building to be a valuable part of the community. The owners also want the building to be attractive to potential renters. For the residents, it may not be much, but it may be all they have.
- Privacy – Always have your building contact with you when you are inspecting common areas and particularly when you are inspecting units. Have your contact arrange ahead of time for you to inspect units. Save yourself and the client a potentially embarrassing situation and knock before entering a room with a closed door. Do not handle personal materials, even if they are lying out.
- Sensitivity – Understand that world views, political views, and general standards of propriety vary widely among our client base. Do not discuss religion or politics. Do not use profanity.

Boundaries (Slide #48)

Personal space – There are distinct zones of comfort based on the type of relationship. Americans are remarkably uniform in their comfort zones:

0" to 18" – Reserved for intimate and deeply personal relationships.

18" to 4' – Personal conversations with friends, family, or associates.

4' to 12' – Formal interactions, like interviews or official meetings.

- Acceptable distance differs widely by culture – Pay attention to the clients. If they seem uncomfortable or continuously back away, give them some room.
- Violating personal space is threatening – Invading personal space offends the sense of personal boundaries.

Understanding (Slide #49)

During the energy audit, you will need to ask the client a lot of questions. You will also need to educate the client on how to maintain the home. Clear communication is key.

- Think carefully about what you are trying to communicate.
    - Getting accurate answers means asking questions that the client can understand. Don't use technical jargon. If there are a few different words for the same building component, make sure you are talking about the same thing. For example, "heater" could refer to the furnace, the water heater, or something else depending on the house and the client. Be as clear as possible.

- Changing filters and cleaning equipment provide an opportunity for client education. People are more likely to remember the lesson if they know how it benefits them. Make it clear that cleaning and maintaining equipment keeps it running efficiently, reduces the likelihood of costly repairs, and helps get the most out of the energy-saving measures being installed. Be clear about how often regular maintenance should take place.

- Consider barriers to effective communication.
  - Language – Do you speak the same language? Can a relative or neighbor help translate?
  - Culture – Cultural norms may dictate which family members you should interact with or how family members treat you in the home. Be flexible.
  - Poor hearing or sight – Someone suffering from sight or hearing loss may ask for a word or phrase to be repeated, or may not see what you're pointing at. Be mindful of their needs.

Summary #1 (Slide #50)

- The mission of WAP is to cost-effectively reduce utility bills for the low- to moderate-income clients we serve.
- The energy auditor collects information to determine cost-effectiveness of measures and possible incidental repairs.
- Advantages of extending Weatherization to multifamily properties include:
  - More units completed for a single engagement.
  - Pre-qualification of tenants is often easier, especially when the building is listed in HUD/DOE WPN 10-15. Even if it is not listed in that notice, the eligibility data is available from the building owner.
  - Many sites have already been abated for lead/asbestos.

Summary #2 (Slide #51)

- Multifamily buildings present technical and communication challenges not usually seen in single-family homes.
  - The clients are important but your main lines of communication are through the building owner. Establish good lines of communication up front.
  - When the building owner/manager pays the utility costs, WAP agreements must ensure that the financial benefits of weatherization accrue to residents.
  - Inspections and calculations are more complex than for single-family homes.

Note that both images on this slide are examples of real challenges in multifamily buildings. The first image shows a note that implies that air conditioning is on, but that picture was taken in mid-winter, when the air conditioning was not on! The second image shows a common Laundromat and a soda machine—neither of which is eligible for WAP funding. If the residents split the bills for common area utilities, then the residents will be paying the utility bills for the washers, dryers, and soda machine. Soda machines are usually supplied for free by the vendor and they are notorious electricity hogs.